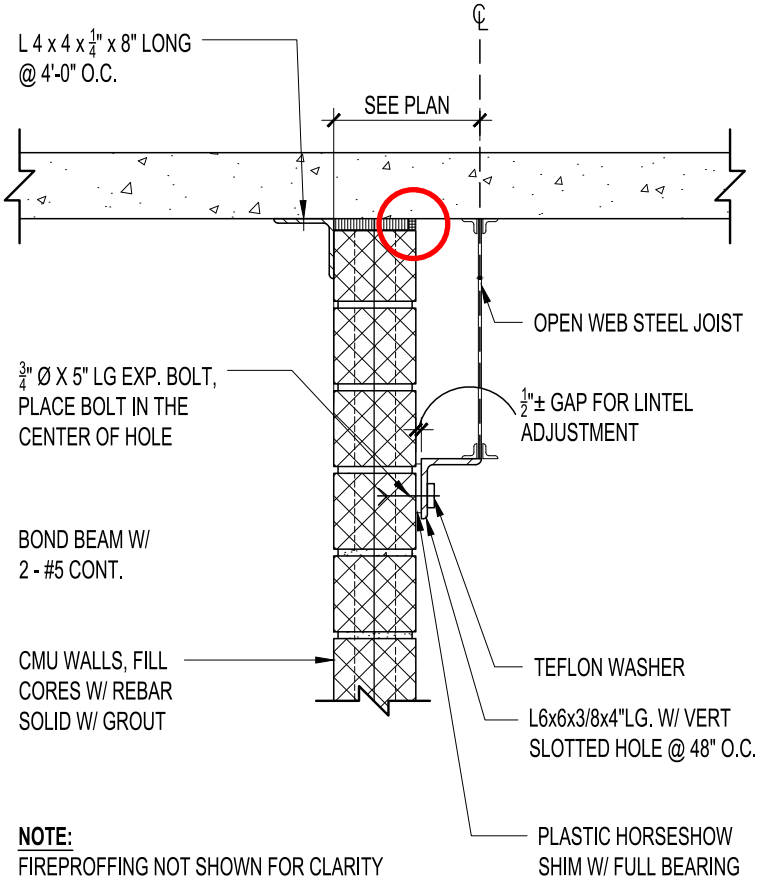

NOTE:
FIREPROFFING NOT SHOWN FOR CLARITY

LATERAL CMU BRACING PARALLEL TO JOIST FOR TOP OF CMU WALL DETAILS

1
A701

NOT TO SCALE