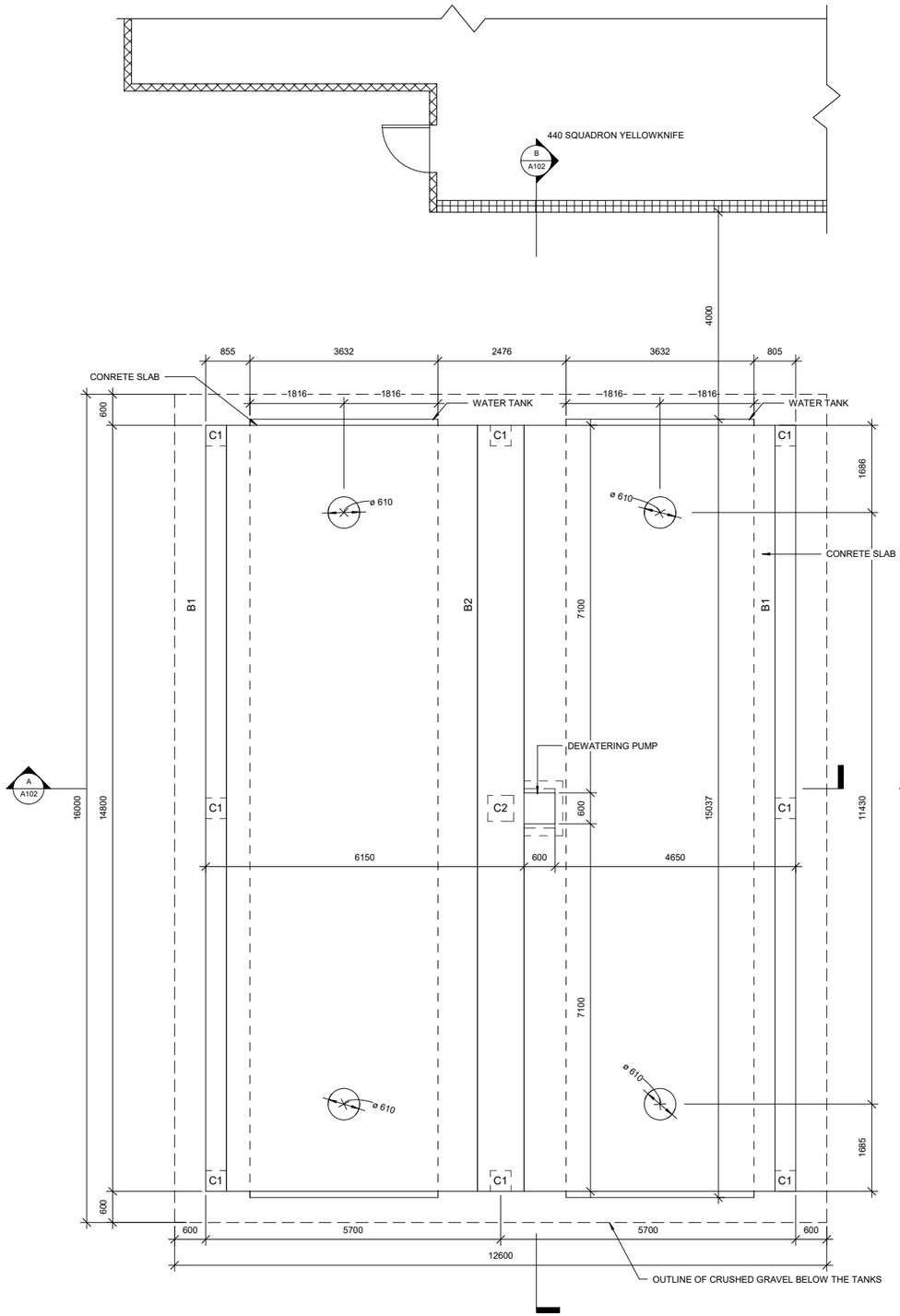

1 LEVEL 1 - PLAN VIEW
1 : 50

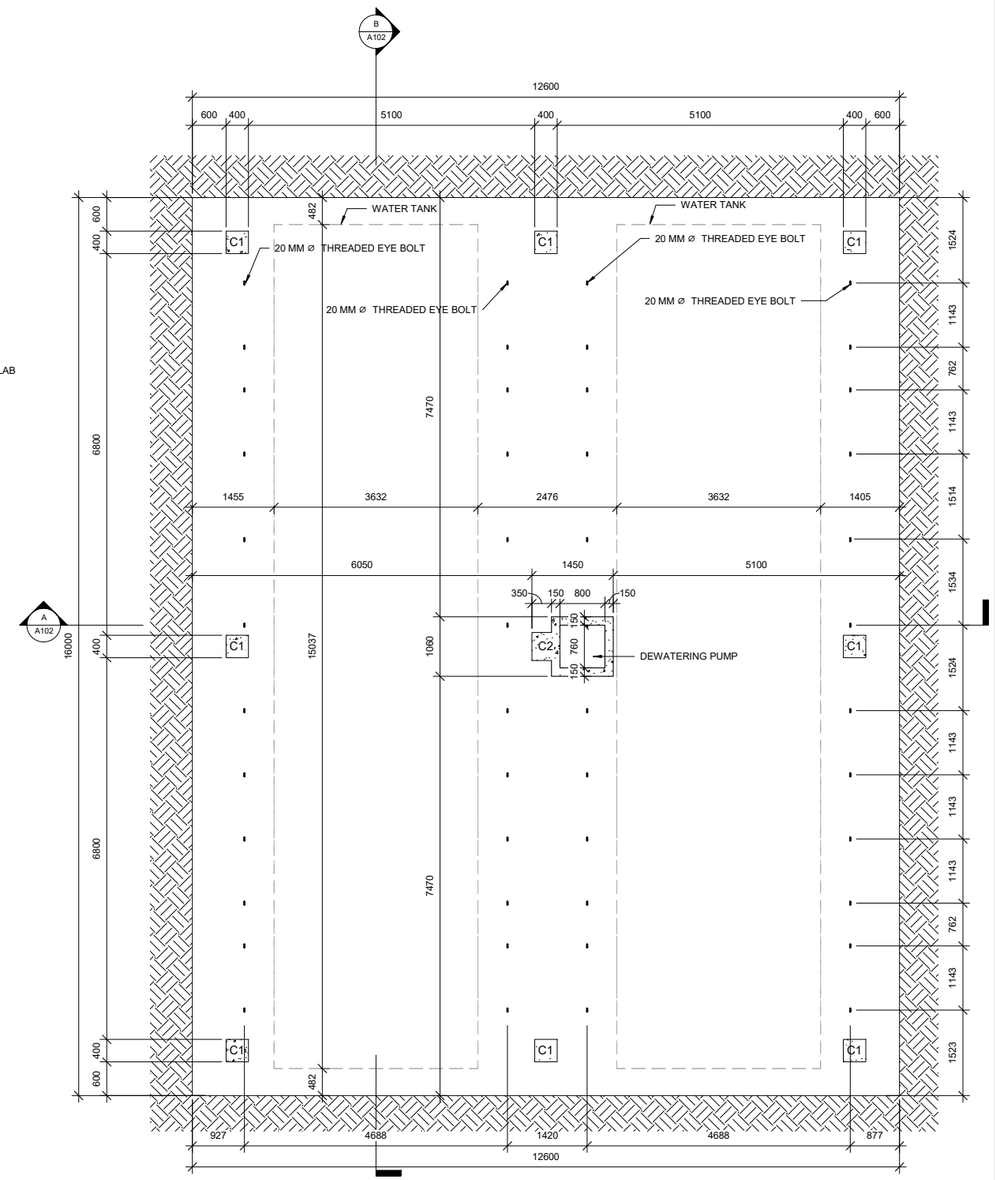

2 BOTTOM LEVEL - PLAN VIEW
1 : 50

STRUCTURE ALL
CONSULTING ENGINEERS LTD
PO BOX 1434 YELLOWKNIFE, NT, X1A 2P1
TEL: 867-669-6793, FAX: 866-246-1636
INTERNET: WWW.STRUCTUREALL.COM
E-MAIL: INFO@STRUCTUREALL.COM

No.	Description	Date

440 Squadron Yellowknife, NT

Sprinkler System Upgrade

PLAN VIEWS

Project number	0001
Date	4/29/2024
Drawn by	Author
Checked by	Checker

A101

Scale	1 : 50

2024-05-03 11:33:31 AM

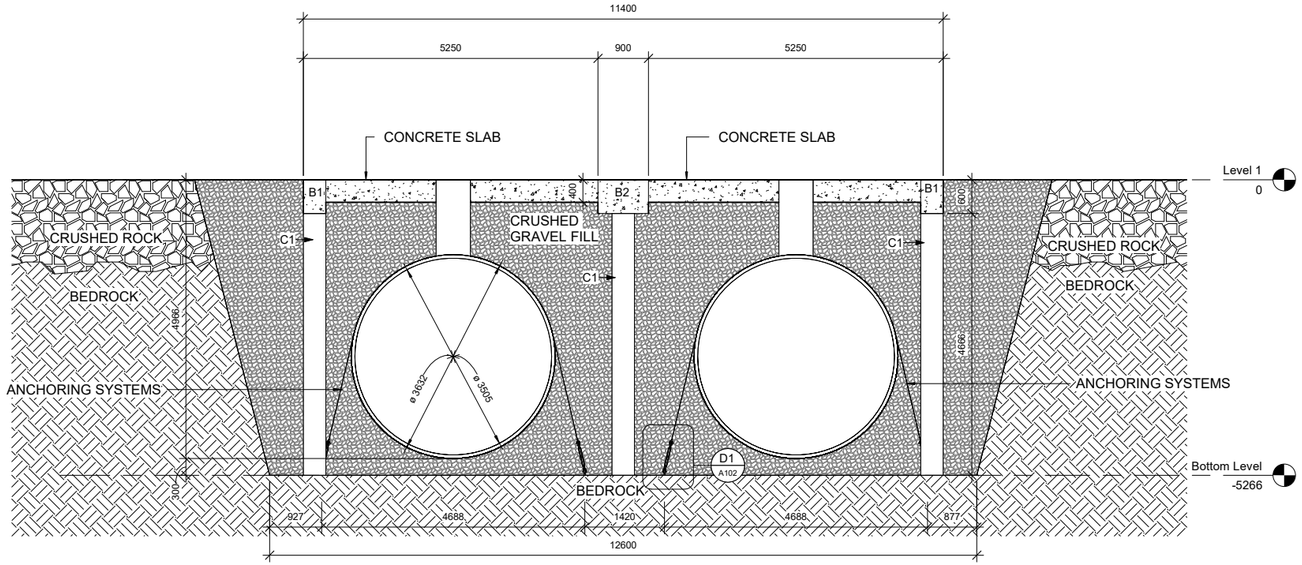

A Section A
1 : 50

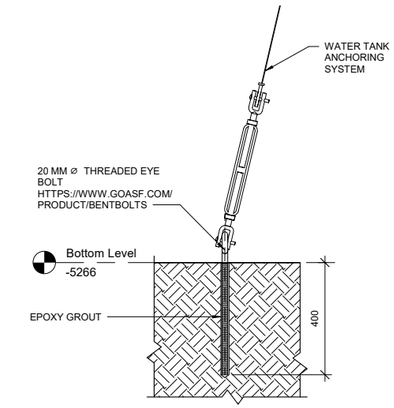

D1 DETAIL D1
1 : 10

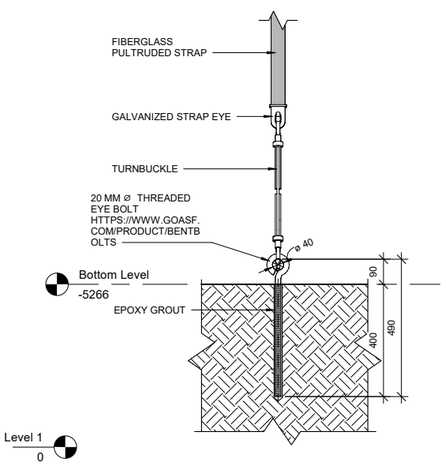

D2 DETAIL D2
1 : 10

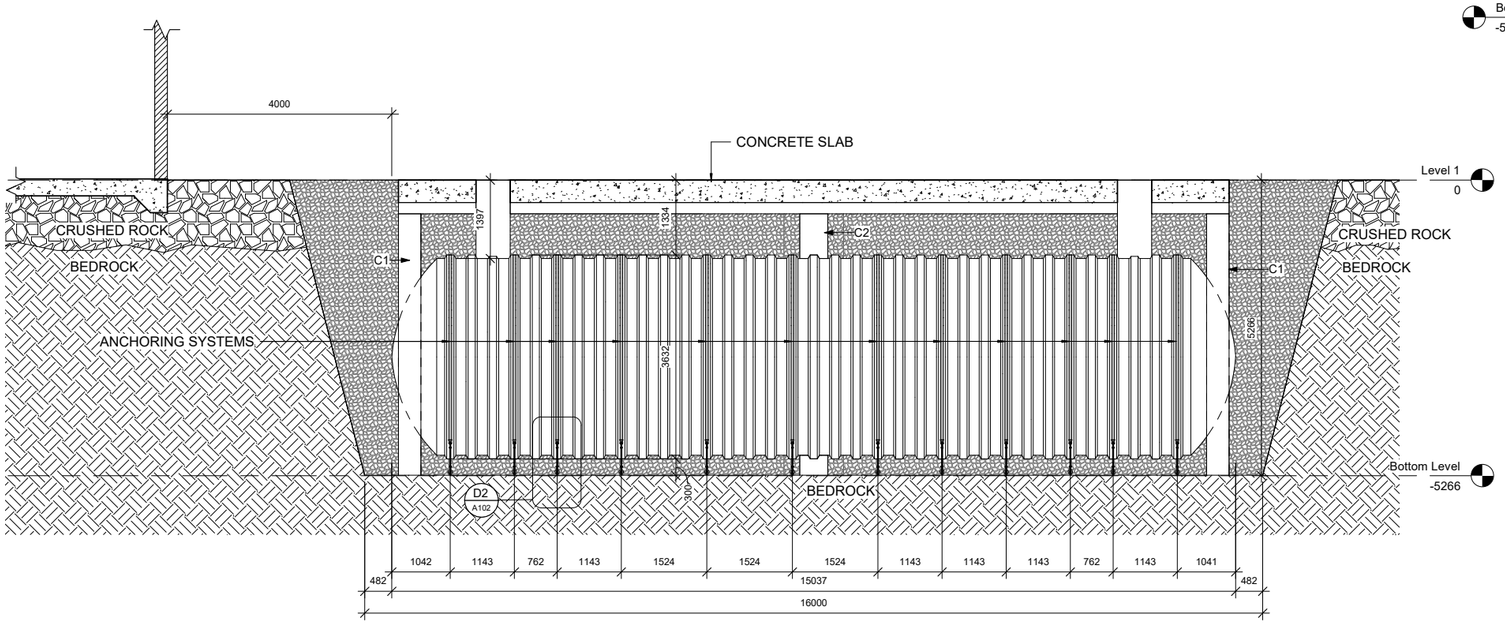

B Section B
1 : 50

STRUCTURE ALL
CONSULTING ENGINEERS LTD
PO BOX 1434 YELLOWKNIFE, NT, X1A 2P1
TEL: 867-669-6793, FAX: 866-246-1636
INTERNET: WWW.STRUCTUREALL.COM
E-MAIL: INFO@STRUCTUREALL.COM

No.	Description	Date

440 Squadron Yellowknife, NT

Sprinkler System Upgrade

SECTIONS & DETAILS

Project number	0001
Date	4/29/2024
Drawn by	Author
Checked by	Checker

A102

Scale	As indicated

2024-05-03 11:34:27 AM

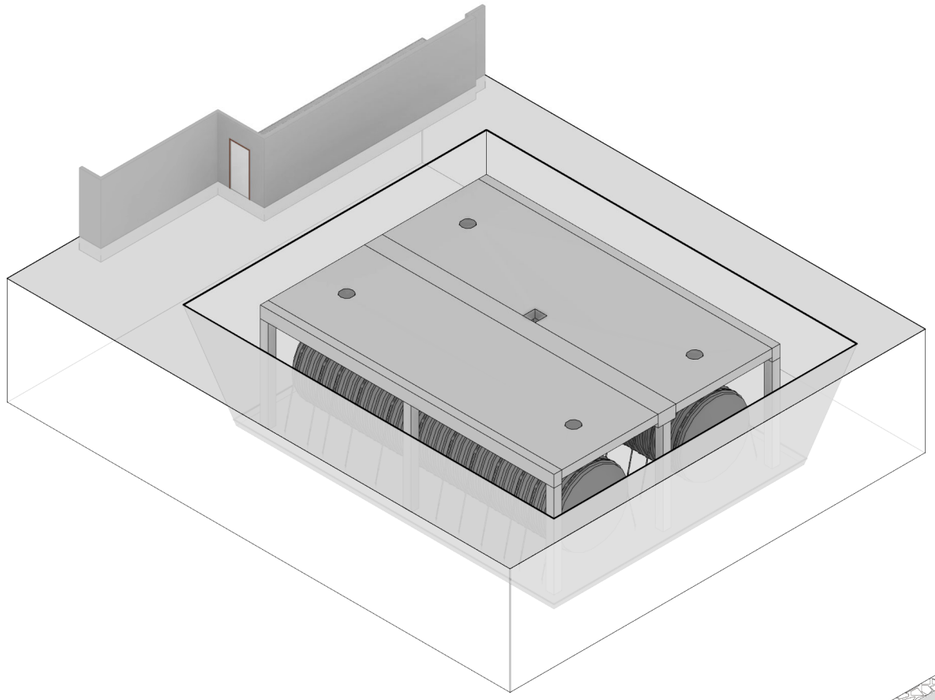

1 LEVEL 1 - 3D VIEW

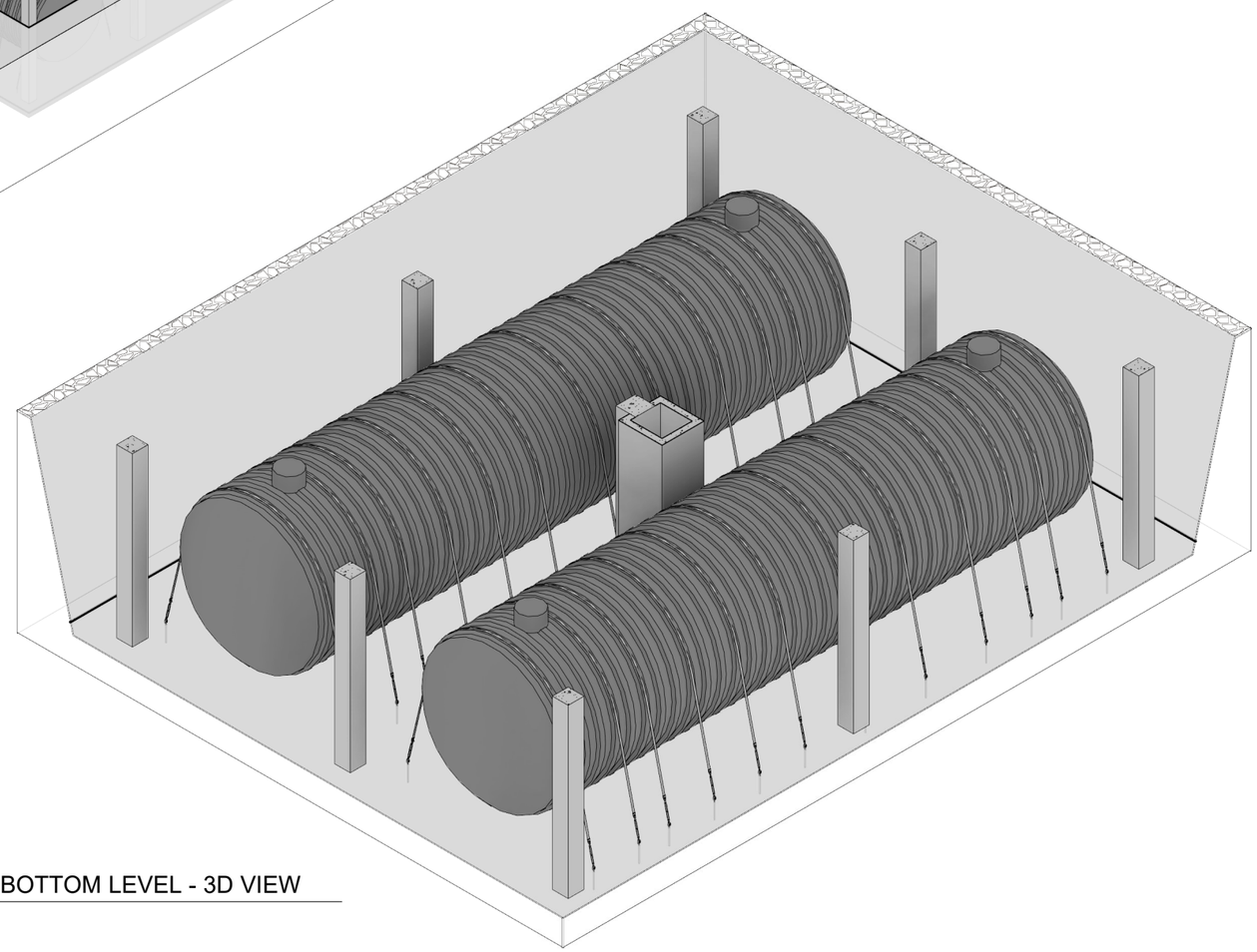

2 BOTTOM LEVEL - 3D VIEW

STRUCTURE ALL
CONSULTING ENGINEERS LTD
PO BOX 1434 YELLOWKNIFE, NT, X1A 2P1
TEL: 867-669-6793, FAX: 866-246-1636
INTERNET: WWW.STRUCTUREALL.COM
E-MAIL: INFO@STRUCTUREALL.COM

No.	Description	Date

440 Squadron Yellowknife, NT

Sprinkler System Upgrade

3D VIEWS

Project number	0001
Date	4/29/2024
Drawn by	Author
Checked by	Checker

A103

Scale

2024-05-03 11:34:44 AM