SOLUTIONS FOR COMPOSITE BEAMS

Hilti X-HVB system

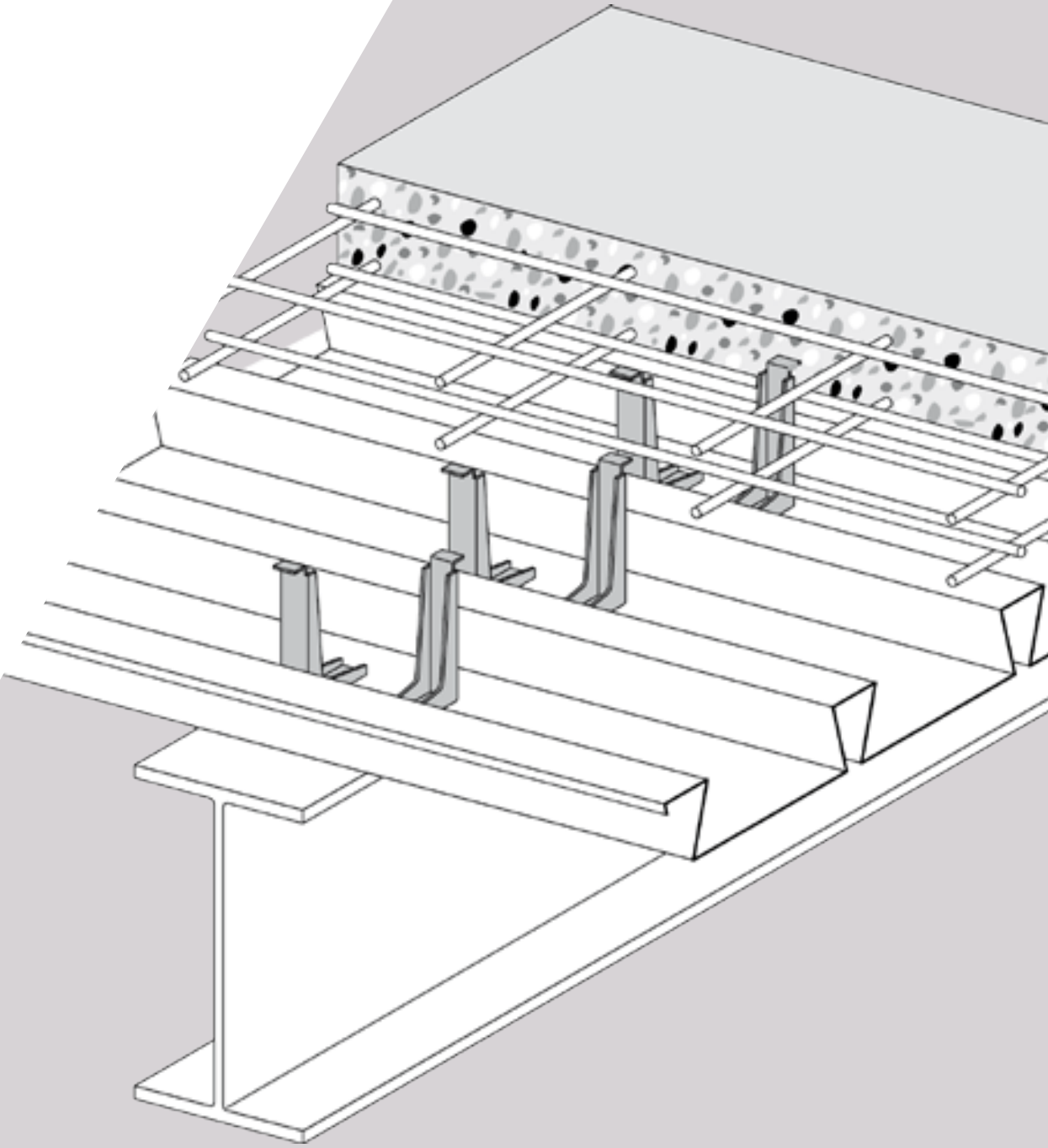

CONTENTS

1. Introduction **3**
1.1 Composite beam design 4
1.2 Types of shear connectors 6

2. Hilti X-HVB system **7**
2.1 Geometry and material specifications 8
2.2 Application requirements 9
2.3 Tools and accessories 11
2.4 Cartridges 12
2.5 Fastening quality assurance 12

3. Benefits and value proposition **13**

4. Shear connector design according to EC4 **16**
4.1 Ductility requirements 16
4.2 Distribution of shear connectors 17
4.3 Longitudinal shear force 17
4.4 Design shear resistance 18

5. X-HVB positioning and spacing **20**

6. Special considerations **21**
6.1 Fire resistance 21
6.2 Rehabilitation 21
6.3 Seismic response in rehabilitation 22
6.4 Deflection control 22

7. References **23**
7.1 Literature 23
7.2 Hilti publications 23
7.3 Project references 23

8. Annexes **24**
Annex A: European Technical Assessment 25
Annex B: Design examples 45
Annex C: Examples of commercial profiled sheeting 47
Annex D: Designation and item numbers 51

1. INTRODUCTION

Composite construction has dominated the multi-storey building sector for over thirty years. Its success is due to the strength and stiffness that can be achieved, with minimum use of materials.

The reason why composite construction is often the ideal solution can be expressed in one simple way: concrete is good in compression and steel is good in tension.

By joining the two materials together structurally these strengths can be exploited to result in a highly efficient and lightweight design in which the resistance may increase by up to a factor of two and the stiffness may increase by up to a factor of three. The reduced self-weight of composite elements has a knock-on effect by reducing the forces in those elements supporting them, including the foundations. Composite systems also offer benefits in terms of speed of construction. The floor depth reductions that can be achieved using composite construction can also provide significant benefits in terms of the costs of services and the building envelope.

Figure 1: Installation of profiled sheeting for a composite slab

The purpose of the X-HVB shear connector is to ensure mechanical connection between steel beams and concrete slabs. It is therefore designed to resist shear forces acting between these structural elements, promoting composite behavior.

This document is intended as a guide to the use of the Hilti X-HVB shear connector in building construction.

It shows how the calculations are made and covers the following topics:
- Characteristics of the X-HVB shear connection system,
- Benefits and value propositions of nailed shear connection,
- Shear connector design according to Eurocode 4,
- Layout of shear connectors,
- Considerations regarding fire resistance and utilization in rehabilitation projects.

The information in this document is in accordance with European Regulations.

1.1 COMPOSITE BEAM DESIGN

As already mentioned, concrete is a material that works well in compression but has negligible resistance in tension. Hence for structural purposes it traditionally relies on steel reinforcement to take up any tensile forces (this is the role played by the steel part of a composite cross section, which is effectively external reinforcement), or must be pre-stressed so that even when subject to tension, an element is in net compression.

If the concrete part (within the so-called effective width) of a cross section is to carry compression, and the steel part is to carry tension, the two materials must be structurally tied together. With beams this is achieved by using shear connectors which are attached to the upper flange of the steel beam. The profiled metal decking that forms the basis of the composite slabs is sandwiched between the base of the connector and the top flange, and the welding/fixing process joins all three together.

When a beam is designed with full shear connection (Figure 2-C), it means that sufficient connectors are present to either fully utilize the concrete in compression, or fully utilize the steel section in tension (whichever is the smaller force).

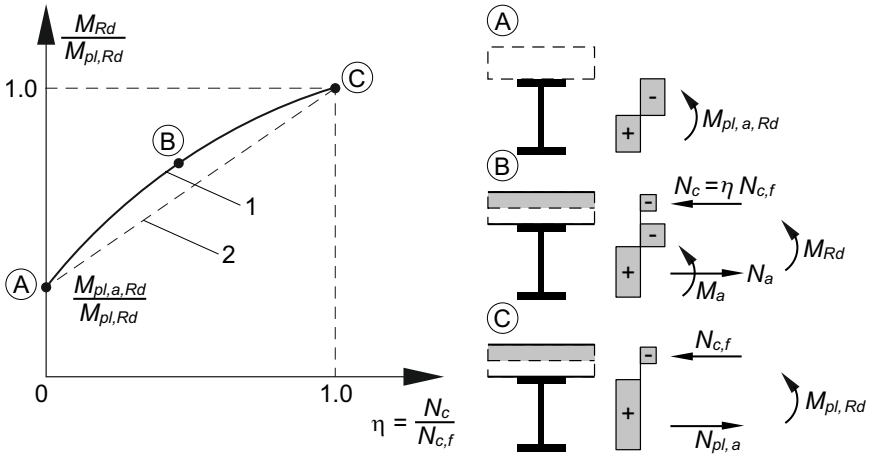

Figure 2: Degrees of shear connection, assuming plastic characteristics

Reduced numbers of connectors may however be used, resulting in so-called partial shear connection. This usually happens if the applied loading is at a low enough level, for example, in common cases where a beam design is governed by construction stage or serviceability considerations. However, building codes also specify a certain minimum degree of connection that is needed to prevent excessive slip between the steel and concrete.

Composite beam design is especially suitable for cross-sections under positive bending moments, as concrete has good resistance to compression. If steel decking is used, the decking's resistance to compression should be neglected.

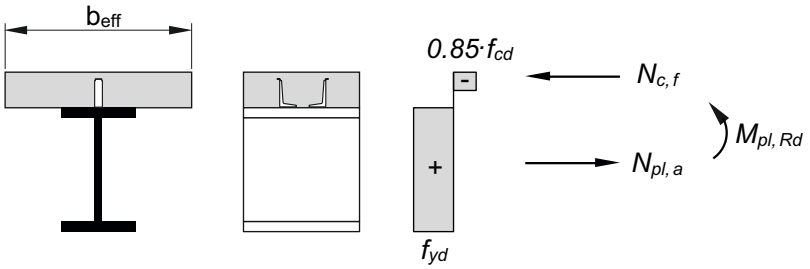

Figure 3: Example of plastic stress distribution for a composite beam with a solid slab and a full shear connection (positive bending moment)

Continuity of the beam can also create negative bending moments near supports. For negative bending moments, the slab's reinforcement is in tension and shear connectors must ensure that tensile force in the reinforcement is transmitted to the steel beam.

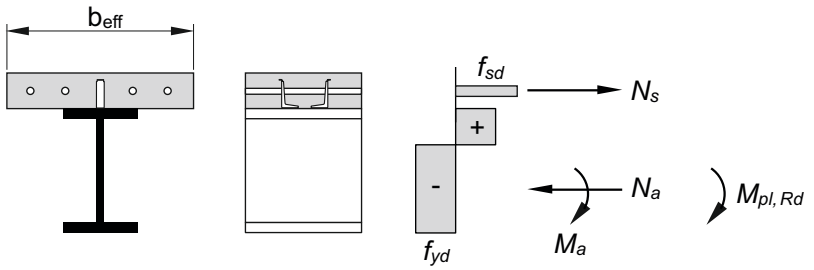

Figure 4: Example of plastic stress distribution for a composite beam with a solid slab and a full shear connection (negative bending moment).

Since the composite member's cross-section is larger than the beam's cross-section alone, the respective moment of inertia is higher, resulting in higher resistance to bending. These considerations allow for slimmer design of structural components. The main benefits related to composite beam design are therefore related to the fact that use of a composite section allows for savings in material and space.

In modern construction, profiled sheeting is used as permanent formwork for the concrete slab and as reinforcement for the composite deck. The decking is utilized to limit the amount of slab propping during construction.

Figure 5: X-HVB shear connector in rehabilitation

1.2 TYPES OF SHEAR CONNECTORS

Welded shear studs

Welded shear studs are a traditional type of shear connector. Typically, welded shear studs exhibit ductile behavior and have good resistance to horizontal shear and vertical uplift, i.e. horizontal shear is resisted by the shank and vertical uplift is prevented by the head.

When steel decking is used, either the studs are welded through the decking or the decking is perforated and pre-welded studs are fitted through the perforations.

Inherent concerns related to welding are as follows:
- welding requires skilled/experienced labor,
- quality control checks may be ambiguous, i.e. visual inspection, sound produced when hammered, bending test,
- equipment required on site, resulting in transportation costs and effort,
- numerous electric cables required, which may lead to tripping hazards,
- welding quality is largely dependent on beam surface conditions, i.e. humidity, rust, etc.,
- welds on wrought iron beams might be brittle and not effective,
- direct welding onto galvanized beams may cause health issues,
- finishing work is necessary after welding on coated/painted beams,
- sites with fire regulations (fire watch) may restrict hot works, i.e. welding.

Figure 6: Hilti X-HVB installed on profiled deck

Hilti X-HVB shear connector

The Hilti X-HVB shear connector is an L-shaped shear connector which is fastened to a beam with two nails driven by a powder-actuated tool. The X-HVB is ductile in all sizes and designed to resist longitudinal shear force, while vertical uplift is prevented by the X-HVB head and the nails.

It is suitable for use at the connection between concrete slabs and steel beams with or without steel decking. As the X-HVB is fastened using the Hilti direct fastening technique, its great versatility allows it to be used in situations where welded studs are not applicable and/or not effective.

The X-HVB system does not require electric power, has an easy and approved inspection procedure and, unlike welding, it is not weather dependent and does not infringe site hot works, i.e. fire-watch, regulations. X-HVB placement is also not sensitive to the beams' surface treatment.

Typical features of the X-HVB are:
- simple, inexpensive installation equipment,
- fastening quality largely independent of weather conditions,
- fast installation allows flexible scheduling of work on the jobsite,
- zinc coatings or moisture do not affect the fastening quality.

When retrofitting/renovating older buildings, i.e. rehabilitation projects, the X-HVB shear connector is fastened to old existing beams that will support newly cast slabs. This method is used in flooring systems for rehabilitation purposes, mostly subjected to static loading.

The main advantages of using the rehabilitation technique are the increase in bending resistance and the decrease in deformability/deflection, hence the ability to adapt structures to modern load requirements and usage.

2. HILTI X-HVB SYSTEMT

The X-HVB system is an effective and efficient solution for secure shear connection. Direct fastening technology makes this shear connector easy to install since it can be set securely and reliably by workmen with simple training.

X-HVB shear connectors are fastened to steel components, typically the top flange of a steel beam, using a Hilti DX 76 (or DX 76 PTR) tool equipped with accessories specifically for this purpose. The nail-driving energy is provided by Hilti DX cartridges (powder-actuated system).

As no welding is required, the X-HVB system can be installed under almost any site conditions. In addition, fastening quality assurance is provided by an easy and
approved inspection process.

The system comprises the following items:
- X-HVB shear connector, available in different heights,
- X-ENP-21 HVB nails, two for each X-HVB shear connector,
- 6.8/18M cartridges, black, red or blue,
- DX 76 (or DX 76 PTR) tool equipped for X-HVB installation.

Figure 7: Hilti X-HVB shear connector

Figure 8: X-ENP-21 HVB nail

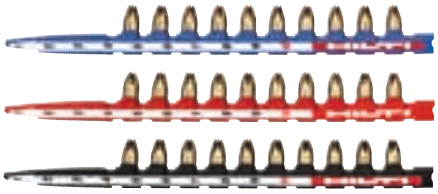

Figure 9: Black, red and blue cartridges

Figure 10: DX 76 HVB tool

The L-shaped shear connectors are cold formed from steel and comprise the fastening leg, the anchorage leg and the head. The anchorage leg is cast into the concrete while the fastening leg is fastened to the steel beam with two X-ENP-21 HVB nails (Figure 11).

The shear connectors are available in seven different anchorage leg heights for different steel decking and slab configurations (detailed geometry in next chapter). Note that X-HVB 40 and X-HVB 50 are used specifically for thin slabs without profiled sheeting.

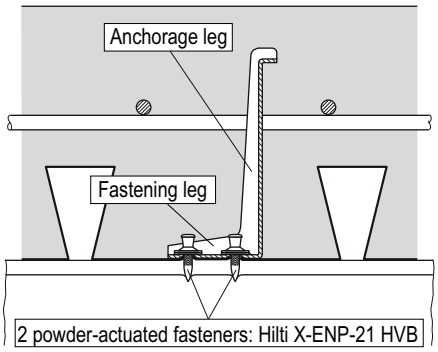

Figure 11: Hilti X-HVB in composite beam

2.1 GEOMETRY AND MATERIAL SPECIFICATIONS

The dimensions and material specifications for the various shear connectors are shown and listed in the following illustrations and table.

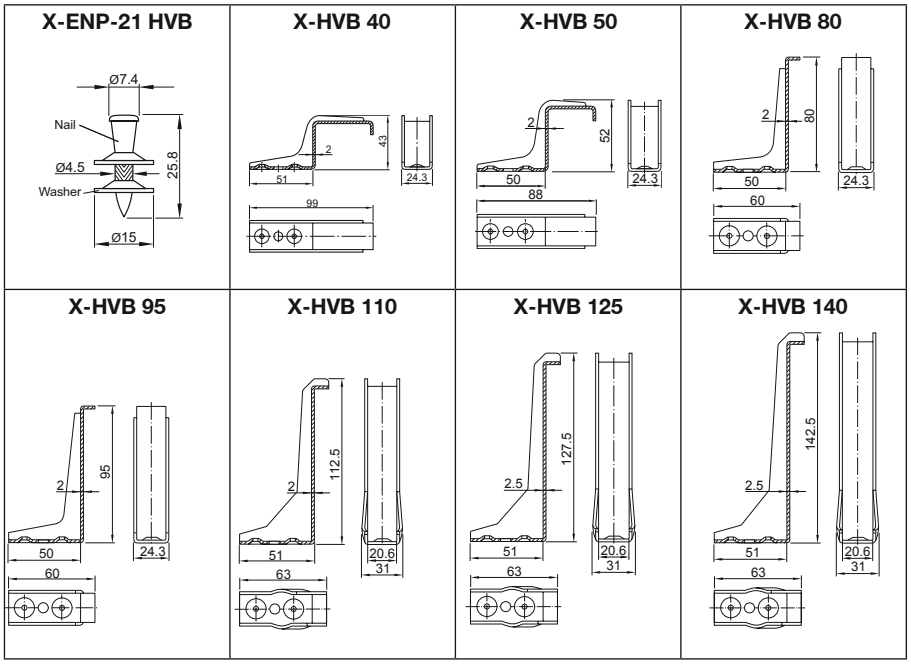

Figure 12: Dimensions of X-ENP-21 HVB fastener and X-HVB shear connectors

Designation	Material
X-HVB shear connector	Non-alloy quality steel DC04, as per EN 10130 Zinc plating: ≥ 3 µm
X-ENP-21 HVB nail	Carbon steel C67S, as per EN 10132-4, quenchead, tempered and galvanized - nominal hardness: 58 HRC Zinc plating: ≥ 8 µm
X-ENP-21 HVB washer	Non-alloy quality steel DC01, as per EN 10139 Zinc plating: ≥ 10 µm

Table 1: X-HVB and X-ENP-21 HVB material specifications

2.2 APPLICATION REQUIREMENTS

The X-HVB system is intended to provide the connection between steel and concrete in composite beams and composite decks according to EN 1994-1-1, either in new buildings or for the renovation of existing buildings, in dry/indoor conditions.

In order to ensure that the system functions correctly, the following factors must be taken into account:

Type of loading
X-HVBs may be used for shear connection in composite structures subject to static and quasi-static loading.

As the X-HVB is a ductile shear connector according to EN 1994-1-1, section 6.6, seismic loading is covered if the X-HVB is employed as the shear connector in composite beams used as secondary seismic members in dissipative as well as non-dissipative structures according to EN 1998-1.

Base material
X-HVBs may be used for shear connection on structural steel S235, S275 and S355 in qualities JR, JO, J2, K2 according to EN 10025-2, with a minimum thickness of 6 mm (for details, please refer to the European Technical Assessment ETA-15/0876).

Old steels which cannot be classified accordingly are still suitable provided these consist of unalloyed carbon steel with minimum yield strength fy of 170 N/mm².

Concrete class
X-HVBs may be used for shear connection with the following concrete classes:
- Normal-weight concrete C20/25 – C50/60
- Light-weight concrete LC20/22 – LC50/55, with a raw density ρ ≥ 1750 kg/m3

Concrete cover

As specified in EN1994-1-1, section 6.6.5.2, if concrete cover is required (exposure class as identified in EN1992-1-1, table 4.1), the nominal concrete cover can be 5 mm less than the values in EN1992-1-1, table 4.4 but not less than 20 mm.

If concrete cover is not required, the code allows for the top of the shear connector to be flush with the top of the concrete slab. Recommended concrete slab thicknesses for the different X-HVBs are listed in Table 2.

	Without corrosion effect [mm]	With corrosion effect [mm]
X-HVB 40	50	60
X-HVB 50	60	70
X-HVB 80	80	100
X-HVB 95	95	115
X-HVB 110	110	130
X-HVB 125	125	145
X-HVB 140	140	160

Table 2: Minimum slab thickness [h]

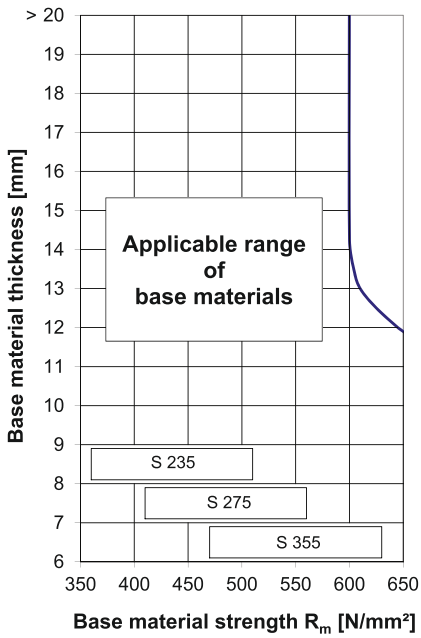

Figure 13: Base material application limit

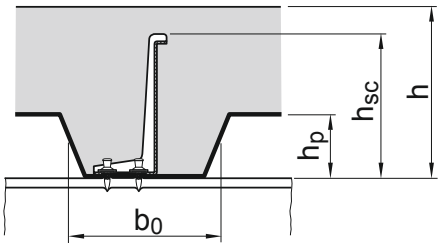

Figure 14: Profiled sheeting geometry

Profiled sheeting

X-HVBs may be used for shear connection in composite beams with or without profiled sheeting.
With profiled sheeting, the following values for the maximum total thickness of the profiled sheeting must be taken into account:

- 2.0 mm, for X-HVB 80, X-HVB 95 and X-HVB 110
- 1.5 mm for X-HVB 125 and X-HVB 140

	$\frac{b_0}{h_p} \geq 1.8$ [mm]	$1.0 < \frac{b_0}{h_p} < 1.8$ [mm]	$\frac{b_0}{h_p} \leq 1.0$ [1] [mm]
X-HVB 80	45	45	30
X-HVB 95	60	57	45
X-HVB 110	75	66	60
X-HVB 125	80	75	73
X-HVB 140	80	80	80

Table 3: Maximum profiled sheeting height, dependent on decking geometry [h_p]

[1] $b_0 / h_p \geq 1.0$ for profiled sheeting perpendicular to the beam combined with X-HVB orientation parallel with the beam

2.3 TOOLS AND ACCESSORIES

Hilti supplies the DX 76 HVB tool which is already suitably equipped to fasten X-HVBs (**Figure 15** and **Figure 16**). In addition, the DX 76 and DX 76 PTR tools can be used. In this case, the fastener magazine has to be replaced with the required piston and fastener guide for X-HVB installation. **Table 3** gives an overview.

Figure 15: DX 76 HVB

Figure 16: DX 76 PTR HVB

Figure 17: DX 76 tool

Figure 18: DX 76 PTR tool

Figure 19: DX 76 fastener guide

Figure 20: DX 76 PTR fastener guide

Figure 21: DX 76 piston and X-76-PS piston stopper

Figure 22: DX 76 PTR piston and X-76-PS piston stopper

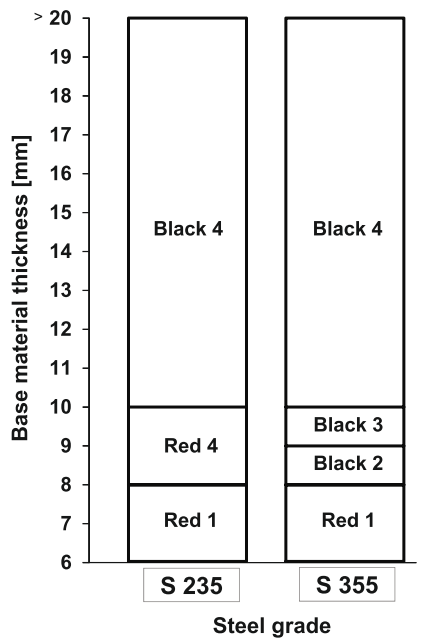

Figure 23: Cartridge pre-selection and power setting

2.4 CARTRIDGES

The DX 76 and DX 76 PTR tools use 6.8/18 M10 cartridges. The type of cartridge, black, red or blue, is dependent on steel beam strength and thickness (**Figure 23**).

For thin base material, from 6 to 8 mm thickness, red cartridges and power setting 1 are recommended (blue cartridges may also be suitable in some cases).

If necessary, increase the power setting until the correct fastener stand-off is achieved (refer to the chapter **Fastening quality assurance**).

Based on the cartridge recommendations, fine adjustments can be made by carrying out nail-driving tests on site. If nail standoff lies between 8.2 and 9.8 mm after the nail is driven, the cartridge and the tool power settings are considered appropriate for the base material.

Color code	Power level
Black	Extra high
Red	Medium-high
Blue	Medium

Table 4: Color code and power level

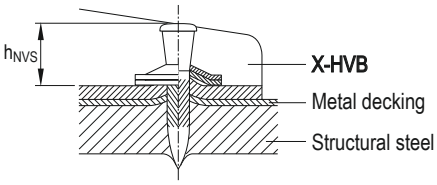

Figure 24: Nail stand-off

2.5 FASTENING QUALITY ASSURANCE

The primary means of checking the quality of the nail fastening is a visual check of nail stand-off (**Figure 24**).

The visual appearance of the top washer and the nail stand-off hNVS indicates how the tool power setting should be adjusted (**Table 5**).

Visual appearance	Corresponding nail stand-off, h_{NVS} [mm]	Adjustment required
Visible damage to top washer	$h_{NVS} < 8.2$	Reduce power setting or use lighter cartridge
Clearly visible piston mark on top washer	$8.2 \leq h_{NVS} \leq 9.8$	No adjustment: Cartridge and power setting are correct
Undeformed top washer	$h_{NVS} > 9.8$	Increase power setting or use heavier cartridge

Table 5: Fastening inspection and nail stand-off

Powder adjustment gauges are available in each X-ENP-21 HVB fastener box.

3. BENEFITS AND VALUE PROPOSITION

An optimal composite structure is one that exploits the benefits of both materials, in a truly unified structural system that overcomes the drawbacks of each material taken individually.

The main advantages of steel are:
- high strength / weight ratio, which leads to a significant reduction of forces acting on the foundation,
- ductility of the material, which makes it especially useful in seismic areas,
- ability to easily use self-supporting profile decks and casting finishing concrete,
- possibility of realizing large spans,
- speed of construction,
- ease of structural changes and subsequent additions.

The advantages of concrete may include:
- the excellent compression behavior, enhanced by the increasing use of high-strength concrete, makes it possible to design elements characterized by smaller cross sections,
- reduced instability and deformability due to the increased stiffness of the elements,
- good performance under exposure to fire,
- moldability of the structural elements.

The combination of these inherent characteristics makes it possible to simply define the main structural advantages of steel/concrete composite structures:
- excellent static performance in terms of strength, stiffness and ductility,
- reduction of local and global instability issues,
- excellent performance in case of fire,
- good speed of construction.

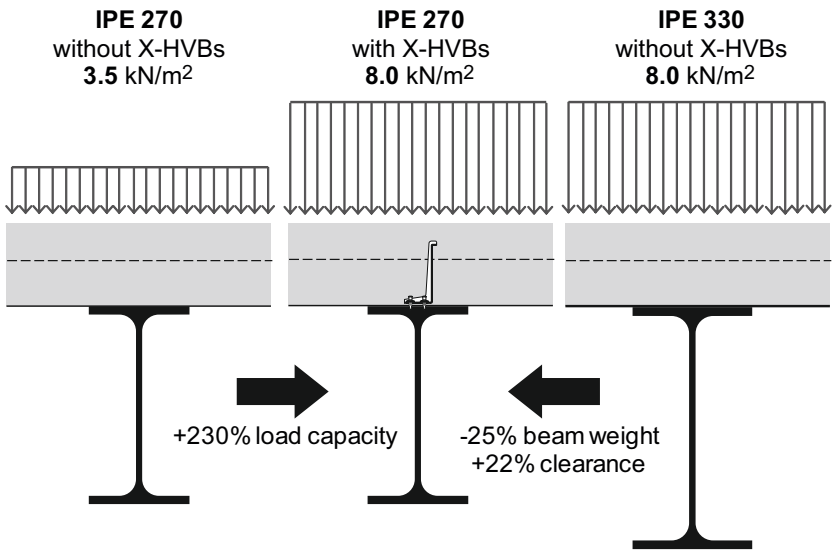

Figure 25: Example of the resulting benefits, taking the following parameters into account:
- beam: 6.0 m span, 2.0 m spacing, S275, unpropped during construction phase
- slab: 0.11m thickness, C25/30
- profiled decking: Hi-Bond 55/800

A further advantage, typical of steel structures, is related to the possibility of making openings in the beam web, which allows a more rational and less invasive distribution of the installations. This is extremely important for production and supply services facilities.

Major benefits of the X-HVB system, compared to traditional welded shear studs, can be listed as follows:

- does not infringe site hot works, i.e. fire-watch, regulations,
- easy and approved inspection method,
- avoids pre-punching of steel decking which enables longer spans and less propping,
- can be installed on coated and painted beams without need for subsequent finishing,
- does not require use of welding equipment and generators, i.e. no equipment transportation to/from and on site,
- installation quality is independent of site conditions, i.e. moisture after rain, light surface rust, etc.

The X-HVB system therefore supports fast construction assembly especially:

- where welded shear studs are pre-welded on primary beams in the yard/shop (ideal welding conditions) and shear connectors are required to be installed on secondary beams on site using the Hilti direct fastening method,
- in case of limited transportation and crane access,
- in remote areas.

Figure 26: Installation phases for X-HVBs on profiled sheeting (from top left clockwise):
- laying profiled sheeting on steel beams,
- installing of X-HVBs through profiled sheeting,
- laying welded mesh reinforcement,
- pouring the concrete.

The following can be considered as the main benefits of using composite structures in rehabilitation.

Increasing the load-bearing capacity

Renovation projects often originate from requirements related to the change of intended use of the building, for example from house premises to offices, with the consequence of higher loads transferred to the floor (both permanent and variable loads). It is therefore necessary to structurally strengthen the floor, thereby making the structure compatible with the new load-bearing capacity requirement.

Improvement of the flexural behavior

Older existing building slabs are generally designed for modest live loads, far below the values prescribed by current regulations in relation to the new intended use of the structure. A higher stiffness is generally required, both to prevent damage to the partition walls and floors, and to improve occupancy comfort, limiting vibrations due to trampling and improving soundproofing.
The immediate effect is not only improved flexural stiffness of the slab due to the beams no longer working separately, but also the creation of a monolithic structure that improves overall stiffness thanks to interconnection with the new composite slab.

Improvement of the technical performance

Reinforcement of existing slabs using the composite slab technique results in other significant benefits to the properties of the floor.

- **Sound insulation**
  The creation of a new concrete slab, combined with a specific acoustic mat and, where possible, with a finishing screed, significantly improves performance in terms of the apparent sound reduction index for airborne noise and the normalized impact noise level for structure-borne noise.
- **Thermal insulation**
  The use of lightweight solutions, in addition to improving the static behavior of the slab, ensures an increase in the thermal insulation of the horizontal partition. In fact, structural lightweight concrete in conjunction with light finishing screeds, by virtue of low thermal conductivity, contributes to the improvement of the thermal transmittance of the entire horizontal partition.
- **Fire protection**
  The presence of a new concrete slab improves the fire behavior of the floor thanks to the presence of a layer filled with fireproof insulating material.

Figure 27: Existing slab to be strengthened by an additional thin concrete layer

4. SHEAR CONNECTOR DESIGN ACCORDING TO EC4

4.1 DUCTILITY REQUIREMENTS

According to EN1994-1-1 section 6.6.1, shear connection and transverse reinforcement is to be provided in order to transmit the longitudinal shear force between the concrete and the structural steel element, ignoring the effect of a natural bond between the two.

In order to allow any inelastic redistribution of shear assumed in design (i.e. plastic analysis), connectors are required to have sufficient deformation capacity, namely, their characteristic slip capacity δ_{uk} must be at least 6 mm.

Where plastic stress distribution is taken into account in the beams, Eurocode 4 allows partial shear connection limited to 0.4 to be taken into account. The degree of shear connection is calculated as follows:

$$\eta = N_c / N_{c,f}$$

Where
- N_c is the design value of the compressive force in the concrete,
- $N_{c,f}$ is the design value of the compressive force in the concrete with full shear connection.

The ductility of a shear connection is tested with push-out tests as defined in EN1994-1-1 section B2 guidelines, with the setup shown in **Figure 28**.

Figure 28: (from left to right):
- standard push-out test setup according to EN 1994-1-1
- example of push-out specimen with X-HVB 40 installed in shallow solid slab

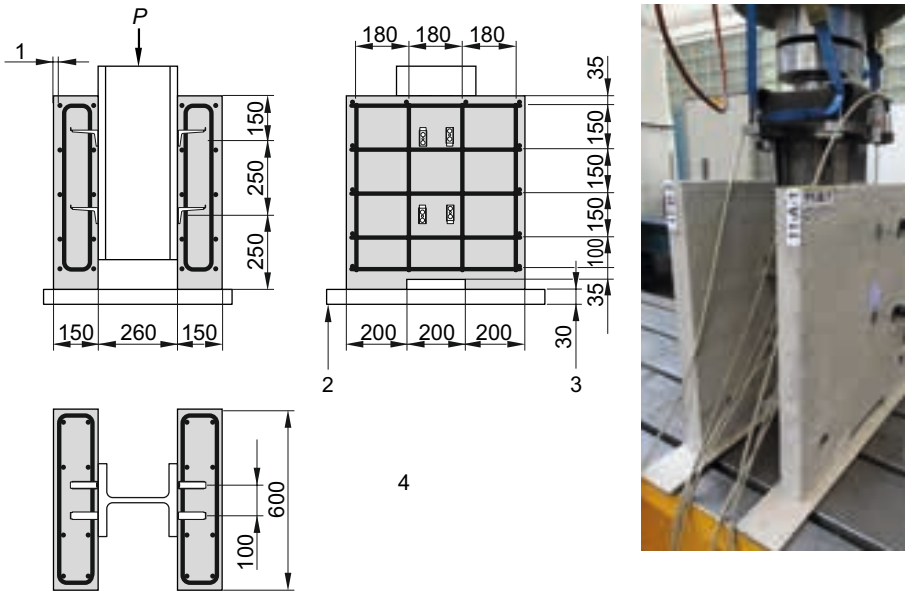

Test results have shown that Hilti X-HVB shear connectors are ductile in all sizes and therefore meet Eurocode 4 requirements for connections with plastic properties.

4.2 DISTRIBUTION OF SHEAR CONNECTORS

If elastic design is required, the shear connectors are distributed along the beam according to shear loads, i.e. higher shear loads near the supports or concentrated load are resisted by closer spacing of shear connectors. Such distribution ensures that each connector carries an equal share of the longitudinal shear force acting on the beam (**Figure 29**).
In case of plastic design, the shear connectors are distributed equally and uniformly along the beam, as the load is redistributed by the shear connectors. The shear connector used must fulfill the ductility requirements of the applicable section of Eurocode 4.

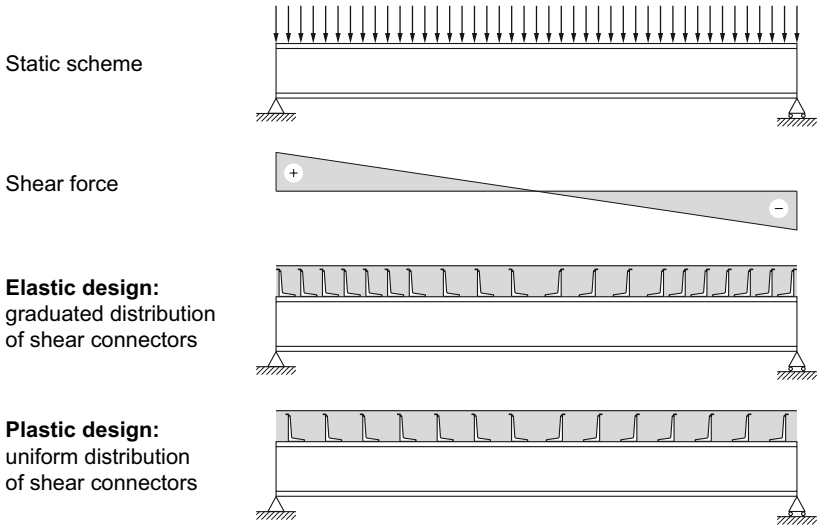

Figure 29: Graduated versus uniform distribution of shear connectors for a simply supported beam with distributed load.

4.3 LONGITUDINAL SHEAR FORCE

Shear connectors are designed to resist the longitudinal shear forces (as per stress distribution of the cross sections) in the horizontal plane between the concrete slab and top flange of the steel beam.

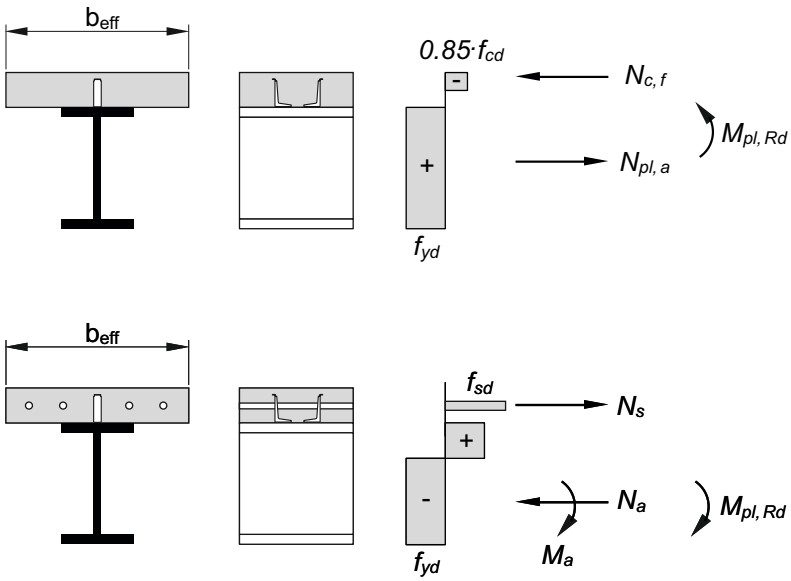

Figure 30: Typical plastic stress distributions for positive and negative bending moments

In case of plastic design, the full shear connection capacity, developed between the support and the center of the beam, must be equal to or greater than the design compressive force $N_{c,f}$ (in case of simple supported beam with uniform load applied). Therefore, in full shear connection, the number of shear connectors to be used is determined by the design longitudinal shear force of the beam divided by the design shear resistance of single shear connector.

4.4 DESIGN SHEAR RESISTANCE

The loadbearing capacity of the X-HVB, i.e the shear resistance in a solid concrete slab, is the combined result of:

- hole elongation in the fastening leg of the connector,
- local deformation of the base steel plus bending of the nails,
- bending of the X-HVB,
- and local deformation of concrete in the contact zone with the connector.

For composite beams with solid slabs, characteristic and design resistances are listed in **Table 6**.

Table 6: Characteristic and design resistance in solid slabs

Designation	Characteristic resistance P_{Rk} [kN]	Design resistance P_{Rd} [kN]
X-HVB 40	29.0	23
X-HVB 50	29.0	23
X-HVB 80	32.5	26
X-HVB 95	35.0	28
X-HVB 110	35.0	28
X-HVB 125	37.5	30
X-HVB 140	37.5	30

When profiled sheeting is present, the shear resistance of the X-HVB is calculated by multiplying the shear resistance without steel decking with reduction factors that are dependent on decking orientation and profile geometry.

Figure 31: Profiled decking geometries for open-trough and re-entrant profiles

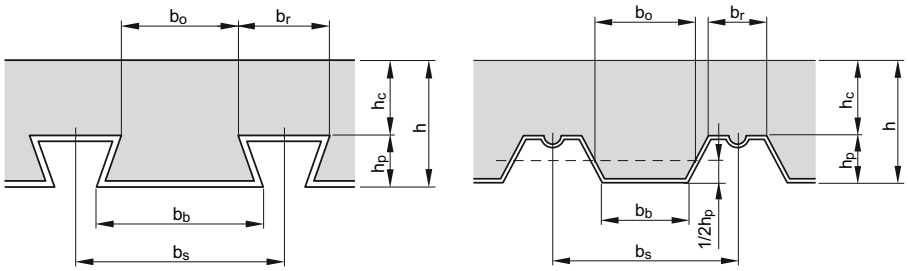

Decking ribs parallel to the beam axis

In case of profiled sheeting with ribs parallel to supporting beam, the design shear resistance of the X-HVB (P_{Rd}) must be multiplied by the reduction factor k_l given by the following expression:

$$k_l = 0.6 \cdot \frac{b_0}{h_p} \cdot \left(\frac{h_{sc}}{h_p} - 1\right) \leq 1.0$$

where,

- b_o is the width of the steel decking profile
- h_p is the height of the steel decking profile
- h_{sc} is the height of the X-HVB

Hence, the design shear resistance must be considered as

$$P_{Rd,l} = k_l \cdot P_{Rd}$$

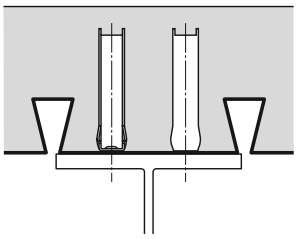

Figure 32: Profiled sheeting parallel to the beam axis

Decking ribs transverse to the beam axis

In case of profiled sheeting with ribs transverse to supporting beam, the design shear resistance of the X-HVB (P_{Rd}) is influenced also by the orientation of the shear connector in relation to the beam axis.

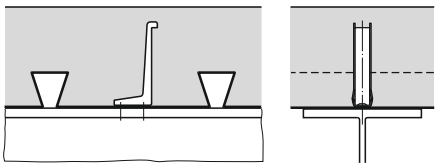

Figure 33: Profiled sheeting transverse to the beam axis, X-HVB parallel

In case of X-HVB positioned longitudinally to the beam axis, the reduction factor $k_{t,l}$ is as follows:

$$k_{t,l} = \frac{0.66}{\sqrt{n_r}} \cdot \frac{b_0}{h_p} \cdot \left(\frac{h_{sc}}{h_p} - 1\right) \leq 1.0$$

Where n_r corresponds to the number of X-HVBs per rib.

In this case, the design shear resistance must be considered as

$$P_{Rd,t,l} = k_{t,l} \cdot P_{Rd}$$

In case of X-HVB positioned transversely to the beam axis, the reduction factor $k_{t,t}$ is as follows:

$$k_{t,t} = \frac{1.18}{\sqrt{n_r}} \cdot \frac{b_0}{h_p} \cdot \left(\frac{h_{sc}}{h_p} - 1\right) \leq 1.0$$

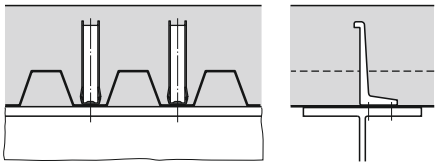

Figure 34: Profiled sheeting transverse to the beam axis, X-HVB transverse

And the design shear resistance is

$$P_{Rd,t,t} = 0.89 \cdot k_{t,t} \cdot P_{Rd}$$

5. X-HVB POSITIONING AND SPACING

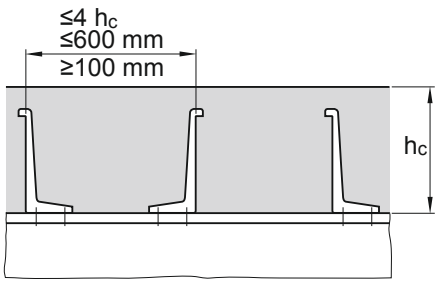

Figure 35: Positioning in solid concrete slab with one row of X-HVB

In composite beams with solid concrete slabs or with profiled sheeting parallel with the beam, the X-HVBs must be positioned parallel with the beam axis and opposing each other (**Figure 35**).

In composite beams with profiled sheeting transverse with the beam, the X-HVBs may be positioned parallel or transverse with the beam axis.

Since load transfer between X-HVBs and the slab is accomplished predominantly by a concrete strut, when profiled decking has narrow ribs and/or stiffeners, the X-HVB should be positioned on the favorable side of the rib, which is towards the nearest beam support, as per **Figure 36**, to allow sufficient load transfer.

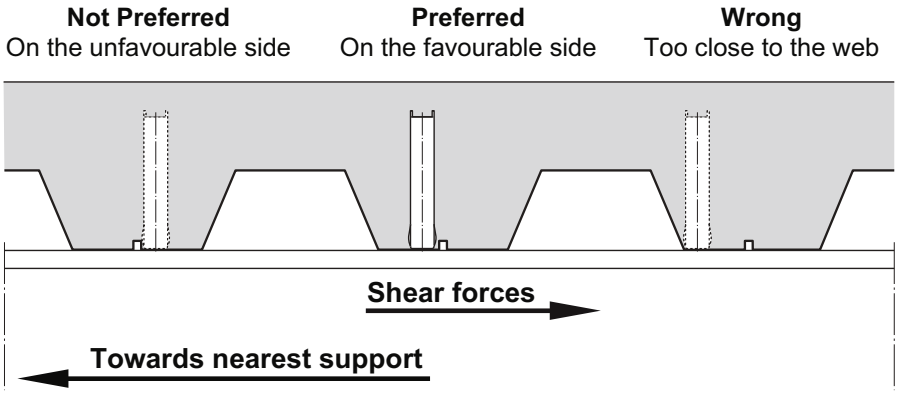

Figure 36: Positioning with profiled sheeting and X-HVBs transverse with the beam

In rehabilitation projects with thin concrete solid slabs, it is necessary to use “duck walk” positioning, i.e. the center of the X-HVB base is positioned on the center line of the beam’s top surface and the X-HVBs are positioned alternately obliquely to the longitudinal axis of the beam.

In the event of uniformly distributed loads, as is often the case, the X-HVBs are positioned symmetrically with the heads pointing towards the nearest support (**Figure 37**).

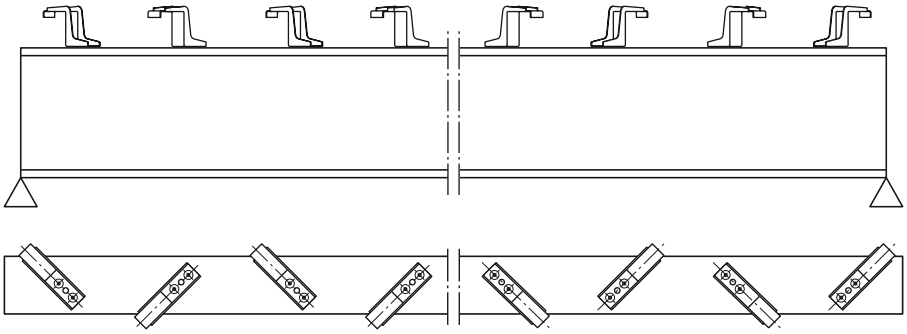

Figure 37: Positioning in solid concrete slab with one row of X-HVB

For detailed information on positioning, spacing and edge distances to be considered, refer to Annex A, “ETA-15/0876”.

6. SPECIAL CONSIDERATIONS

6.1 FIRE RESISTANCE

The temperature-dependent characteristic shear resistance of X-HVB shear connectors in a solid slab, in the fire situation, should be determined according to the following expression:

$$P_{fi,Rd} = k_{u,\theta,X-HVB} \cdot \frac{P_{Rk}}{\gamma_{M,fi}}$$

Where
- P_{Rk} is the characteristic shear resistance of X-HVB, as provided in ETA-15/0876,
- $\gamma_{M,fi}$ is the partial safety factor for shear resistance for the fire situation (as stated in EN1994-1-2, section 2.3, the recommended value for $\gamma_{M,fi}$ is 1),
- $k_{u,\theta,X-HVB}$ is the temperature dependent strength reduction factor given in the following table.

Temperature of top flange θ_{X-HVB} [°C]	$k_{u,\theta,X-HVB}$
20	1.00
100	1.00
200	0.95
300	0.77
400	0.42
500	0.24
600	0.12
>700	0

Table 7: Temperature dependent strength reduction factor

The temperature of shear connectors to be considered is the temperature of the upper flange of the beam.

When profiled steel decking is used, the characteristic resistance P_{Rk} of X-HVB should be further multiplied by the reduction factors which are dependent on decking rib orientation, as presented in Annex C5 of ETA-15/0876.

When designing for a fire situation, the total characteristic shear resistance of X-HVBs is compared to the longitudinal shear force acting on the beam with fire loading.

6.2 REHABILITATION

Results of push-out tests carried on in cooperation with the University of Stuttgart indicate similar performance for X-HVBs installed on normal weight concrete and lightweight concrete solid slabs.

According to these results, lightweight concrete can be chosen to utilize all benefits related to a lighter structure (reduced self weight, greater loading capability, better seismic response).

In case of fastening on old steel beams with an ultimate strength of $F_u \leq 360$ N/mm^2 (with a $F_{u,min} = 300$ N/mm^2), a conservative reduction factor for design shear resistance P_{Rd} must be taken into account (please refer to Annex C3 of ETA-15/0876).

Figure 38: X-HVB installed with “duck walk” positioning on an old steel beam

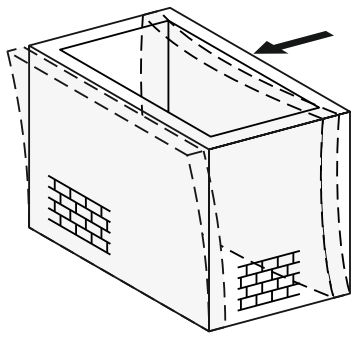

Figure 39: Out-of-plane collapse

6.3 SEISMIC RESPONSE IN REHABILITATION

A major source of vulnerability of existing buildings (particularly masonry structures with wooden/steel beam slabs) is associated with local collapse mechanisms (out-of-plane response of the bearing walls). By improving connections between the elements, through new composite slabs interconnected with perimeter walls, the seismic behavior of the entire building can be improved.

For proper seismic improvement, it is extremely important to create diaphragms (slabs) capable of transferring the horizontal actions of the earthquake to the shear-resistant walls. Diaphragms help to constrain the out-of-plane deformation of the walls, preventing the collapse, through keeping the box-like configuration; the stiffness of the diaphragms in their plane influences the distribution of the horizontal forces between different sidewalls. To be able to represent an effective constraint, diaphragms have to be able to transmit forces and tensile stresses and must also be properly connected to the walls, as evidenced by Eurocode 8 - Part 3.

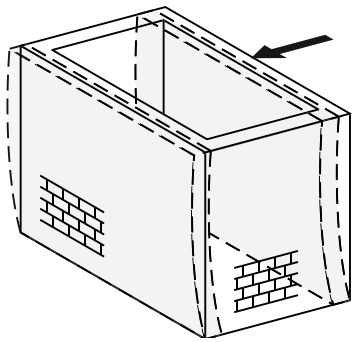

Figure 40: Out-of-plane collapse prevented, rigid diaphragm

6.4 DEFLECTION CONTROL

If the shear connection is only required for deflection control there is no minimum degree of connection. However, maximum allowable connector spacing applies and the steel beam must have sufficient capacity to carry the self-weight and all imposed loads.

7. REFERENCES

7.1 LITERATURE

Kuhlmann, U.; Eggert, F.; Reininger, L. (2015): Push-out Versuche an Hilti X-HVB Schenkeldübeln, Institut für Konstruktion und Entwurf, Universität Stuttgart, 2015-112X. Versuchsbericht.

Gemander, A. (2015): Durchführung von Querzugversuchen an Setzbolzenverbindungen, MPA Materialprüfungsanstalt Universität Stuttgart, 29.9.2015

Beck H., Siemers M., Reuter M. (2011): Powder-actuated fasteners and fastening screws in steel construction, Stahlbau-Kalender. Ernst & Sohn

Peleska K. (1999): Partial connection of steel and concrete composite beams with HVB shear connectors, Department of Steel Structures, CVUT Praha, Proceedings of 2nd European Conference on Steel Structures, Praha, Czech Republic, May 26-29

Thomas D.A.B., O´Leary D.C. (1998): Composite beams with profiled-steel sheeting and non-welded shear connectors, Steel Construction Today, no. 2, 117 – 121

Crisinel, M. (1995): Essais "Push-out", HVB 95/125/140 et toles profilees, EPF-Lausanne, ICOM 663-3F, June 1995

Daniels B.J., Crisinel M., O´Leary D. (1990): Testing of Continuous Span Composite Slabs with Hibond 55 Profiled Sheeting, EPF Lausanne, Publication ICOM 229

Crisinel M. (1990): Partial-Interaction Analysis of Composite Beams with Profiled Sheeting and Nonwelded Shear Connectors, Journal of Constructional Steel Research 15 (1990) 65 – 98

Badoux J.C. (1989): The Behaviour and Strength of Steel to Concrete Connection using HVB Shear Connectors (EC4-Design), EPF Lausanne, ICOM 617-4, 6/1989

Crisinel M., Clenin D. (1985): Neuer Verbunddübel für Konstruktionen mit Stahl/Beton-Verbund, Schweizer Baublatt 77, 9/85

Tschemmernegg F. (1985): Zur Bemessung von Schenkeldübeln, eines neuen Dübels für Verbundkonstruktionen im Hochbau, Bauingenieur 60 (1985)

7.2 HILTI PUBLICATIONS

The Hilti Direct Fastening Technology Manual (DFTM) is intended as a guide on how to use and choose suitable and correct direct fastening solutions for each specific application. The DFTM provides all the technical data necessary for the correct utilization of Hilti's direct fastening products and describes the main principles and techniques that have an influence on direct fastening.

Figure 41: Hilti Direct Fastening Technology Manual

7.3 PROJECT REFERENCES

For up-to-date project references, please refer to your local Hilti Website.

8. ANNEXES

Annex A: European Technical Assessment

Annex B: Design examples

Annex C: Examples of commercial profiled sheeting

Annex D: Designation and item numbers

ANNEX A: EUROPEAN TECHNICAL ASSESSMENT

Deutsches Institut für Bautechnik DIBt

Approval body for construction products and types of construction

Bautechnisches Prüfamt

An institution established by the Federal and Laender Governments

Member of EOTA www.eota.eu

Designated according to Article 29 of Regulation (EU) No 305/2011 and member of EOTA (European Organisation for Technical Assessment)

European Technical Assessment

ETA-15/0876 of 3 June 2016

English translation prepared by DIBt - Original version in German language

General Part

Technical Assessment Body issuing the European Technical Assessment:	Deutsches Institut für Bautechnik
Trade name of the construction product	Nailed Shear Connector X-HVB
Product family to which the construction product belongs	Nailed shear connector
Manufacturer	Hilti AG Feldkircherstraße 100 9494 Schaan FÜRSTENTUM LIECHTENSTEIN
Manufacturing plant	Plant 1 Plant 2
This European Technical Assessment contains	20 pages including 15 annexes which form an integral part of this assessment
This European Technical Assessment is issued in accordance with Regulation (EU) No 305/2011, on the basis of	European Assessment Document (EAD) 200033-00-0602

Deutsches Institut für Bautechnik
Kolonnenstraße 30 B 10829 Berlin | GERMANY Phone: +49 30 787 30-0 Fax: +49 30 787 30-320 | E-mail: eta@dibt.de | www.dibt.de

Electronic copy of the ETA by DIBt: ETA-15/0876

The European Technical Assessment is issued by the Technical Assessment Body in its official language. Translations of this European Technical Assessment in other languages shall fully correspond to the original issued document and shall be identified as such.

Communication of this European Technical Assessment, including transmission by electronic means, shall be in full. However, partial reproduction may only be made with the written consent of the issuing Technical Assessment Body. Any partial reproduction shall be identified as such.

This European Technical Assessment may be withdrawn by the issuing Technical Assessment Body, in particular pursuant to information by the Commission in accordance with Article 25(3) of Regulation (EU) No 305/2011.

Electronic copy of the ETA by DIBt: ETA-15/0876

Specific part

1 Technical description of the product

The nailed shear connector X-HVB is a mechanically attached shear connector for use in steel-to-concrete composite beams and in composite decks with profiled sheeting as an alternate to welded headed studs.

The nailed shear connector consists of an L-shaped cold-formed cantilever metal connector made from steel sheeting with a thickness of 2 mm or 2.5 mm. The cantilever metal part consists of a fastening leg and an anchorage leg. The fastening leg of the connector is fastened by 2 powder-actuated fasteners X-ENP-21 HVB to the steel member, whereas the anchorage leg embeds in the concrete deck of the composite beam. The nailed shear connector can be used for composite beams with and without profiled composite decking.

The height of the anchorage leg varies in order to take the different thicknesses of the concrete slab as well as the different heights of composite deck into account.

The different models of the X-HVB are:

X-HVB 140, X-HVB 125, X-HVB 110, X-HVB 95, X-HVB 80, X-HVB 50 and X-HVB 40.

The number in the product designation refers to the height of the X-HVB connector.

The powder-actuated fasteners X-ENP-21 HVB are made of zinc plated carbon steel. The fasteners comprise of a pin with a shank diameter of 4.5 mm and they are assembled with two metal washers. The washers serve to guide the fastener while it is being driven into the base material and they contribute to the shear resistance. The powder-actuated fastening tools Hilti DX 76 or Hilti DX 76 PTR are used in order to install the X-ENP-21 HVB together with the X-HVB shear connector. The driving force of the fastening tool is provided by the power load of the cartridge. The application limit of the powder-actuated fastening system depends on the strength and thickness of the base material. The fastening tools (incl. cartridges) are an integral part of this assessment with regard to the capacity of the nailed shear connector X-HVB and the application of the respective system.

The nailed shear connectors can be placed in one or more rows along the length of the composite beams. Aside of the use as shear connector for composite beams, nailed shear connectors may also be used for the end anchorage of composite decks, see Annex A1.

The shear connectors X-HVB and the powder-actuated fastener X-ENP-21 HVB are detailed in Annexes A1 and A2.

2 Specification of the intended use in accordance with the applicable European Assessment Document

The nailed shear connector X-HVB is intended to be used as connection device between steel and concrete in composite beams and composite decks according to EN 1994-1-1. The nailed shear connector can either be used in new buildings or for the renovation of existing buildings with the aim to increase the bearing capacity of aged floor constructions.

Shear connections of composite structures subject to static and quasi-static loading.

As the X-HVB is a ductile shear connector according to EN 1994-1-1, section 6.6, seismic loading is covered if the X-HVB is used as shear connector in composite beams used as secondary seismic members in dissipative as well as non-dissipative structures according to EN 1998-1.

The intended use is also specified in Annex A1 and B1 to B4.

Positioning of the connectors follows Annexes B5 to B8.

The installation is only carried out according to the manufacturer's instructions.

Electronic copy of the ETA by DIBt: ETA-15/0876

In combination with composite decking the steel sheeting is in direct contact with the steel base material in the area of the connection.

Cartridge selection and tool energy settings in order to match the application limit diagram are taken into account.

Installation tests are carried out (e.g. check of nail head standoff h_{NVS}), provided the fitness of the recommended cartridge cannot be checked otherwise.

The performances given in Section 3 are only valid if the nailed shear connector is used in compliance with the specifications and conditions given in Annexes B1 to B8.

The verifications and assessment methods on which this European Technical Assessment is based lead to the assumption of a working life of the nailed shear connector of at least 50 years. The indications given on the working life cannot be interpreted as a guarantee given by the producer, but are to be regarded only as a means for choosing the right products in relation to the expected economically reasonable working life of the works.

3 Performance of the product and references to the methods used for its assessment

3.1 Mechanical resistance and stability (BWR 1)

Essential characteristic	Performance
Characteristic resistance in solid concrete decks, shear connector orientation parallel to beam axis	See Annex C1
Characteristic resistance in solid concrete decks, shear connector orientation perpendicular to beam axis	No performance determined
Characteristic resistance in composite decks – decking ribs perpendicular to beam axis – shear connector orientation parallel or perpendicular to beam axis	See Annex C1
Characteristic resistance in composite decks – decking ribs parallel to beam axis – shear connector orientation parallel to beam axis	See Annex C2
Characteristic resistance in composite decks – decking ribs parallel to beam axis – shear connector orientation perpendicular to beam axis	No performance determined
Characteristic resistance of end anchorage of composite decks	See Annex C4
Characteristic resistance for use in seismic areas under seismic actions according to EN 1998-1	See Annex B1
Characteristic resistance in solid concrete decks in renovation application with old metallic iron or steel material with an actual yield strength less than 235 MPa	See Annex C3
Application limit	See Annex B3, pass

Electronic copy of the ETA by DIBt: ETA-15/0876

3.2 Safety in case of fire (BWR 2)

Essential characteristic	Performance
Reaction to fire	Class A1 according to EN 13501-1:2007+A1:2009
Resistance to fire	See Annex C5

3.3 Hygiene, health and the environment (BWR 3)

Essential characteristic	Performance
Content and/or release of dangerous substances	no performance determined

4 Assessment and verification of constancy of performance (AVCP) system applied, with reference to its legal base

In accordance with EAD No. 200033-00-0602, the applicable European legal act is: Decision 1998/214/EC.

The system to be applied is: 2+

5 Technical details necessary for the implementation of the AVCP system, as provided for in the applicable EAD

Technical details necessary for the implementation of the AVCP system are laid down in the control plan deposited with Deutsches Institut für Bautechnik.

Issued in Berlin on 3 June 2016 by Deutsches Institut für Bautechnik

Uwe Bender
Head of Department

beglaubigt:
Stöhr

Electronic copy of the ETA by DIBt: ETA-15/0876

Nailed shear connector X-HVB with powder-actuated fastener X-ENP-21 HVB

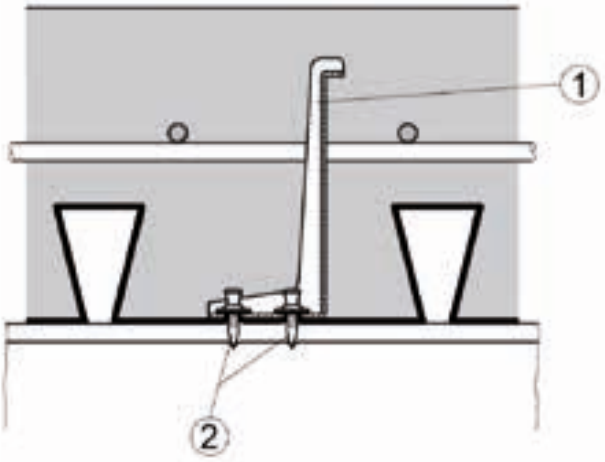

① Connector X-HVB

② Powder-actuated fasteners X-ENP-21 HVB

Example of intended use: Nailed shear connection in composite beam

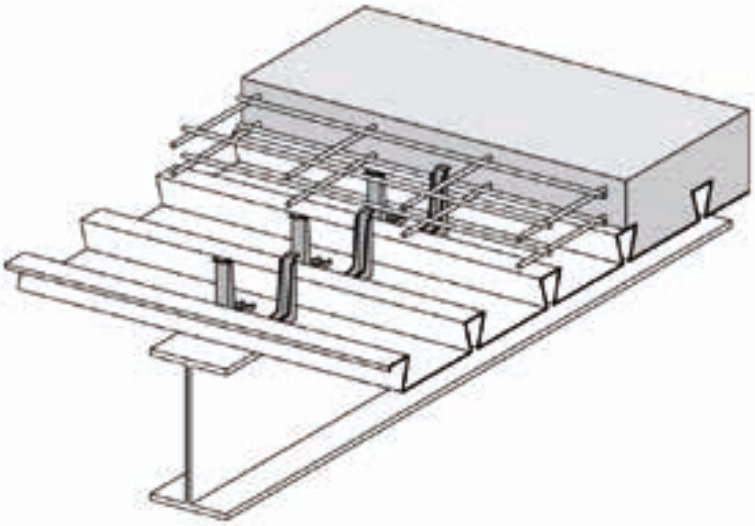

Nailed shear connector X-HVB	Annex A1
Product and intended use	

Z34612.16 8.06.02-26/14

Electronic copy of the ETA by DIBt: ETA-15/0876

Page 7 of European Technical Assessment
ETA-15/0876 of 3 June 2016

English translation prepared by DIBt

Deutsches Institut für Bautechnik DIBt

Types of shear connector X-HVB

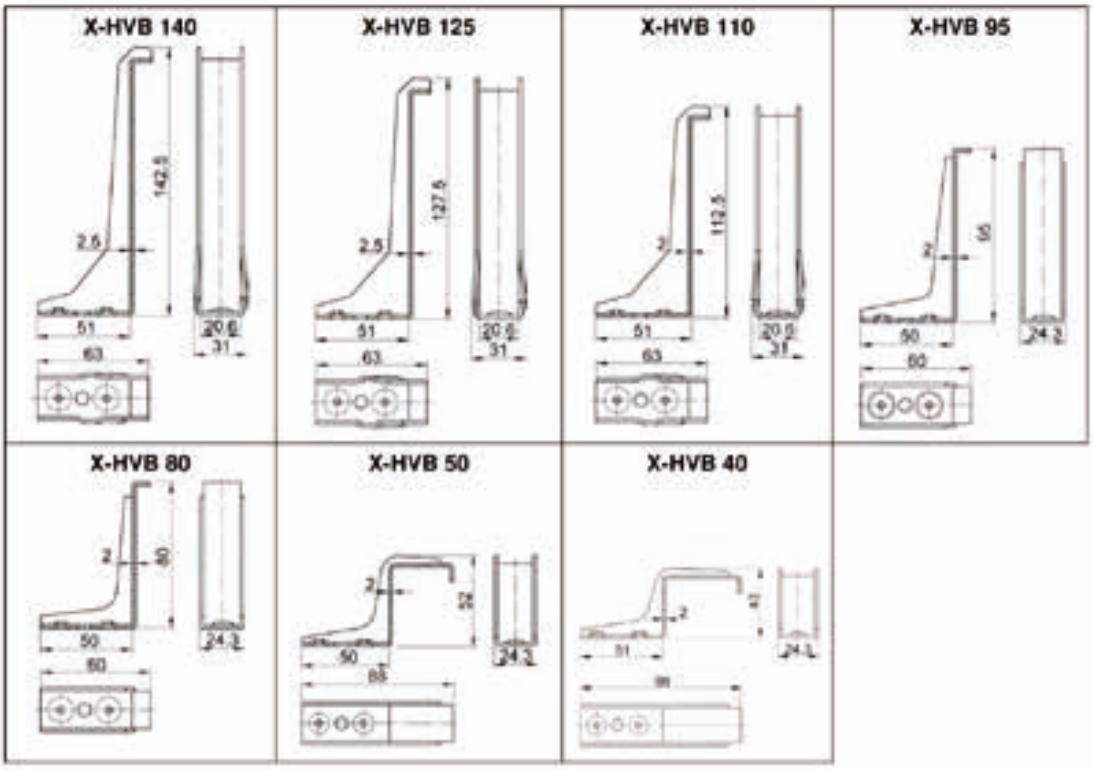

Table 1: Materials

Designation	Material
Shear connector X-HVB	Steel DC04 of a thickness of 2 or 2.5 mm according to EN 10130, zinc plating ≥ 3 µm
Powder-actuated fastener X-ENP-21 HVB	Nail: Carbon steel C67S in keeping with EN 10132-4, quenched, tempered and galvanized. Nominal hardness: 58 HRC, Zinc plating ≥ 8 µm Washer: Steel DC01 according to EN 10139, zinc plating ≥ 10 µm

Powder-actuated fastener X-ENP-21 HVB

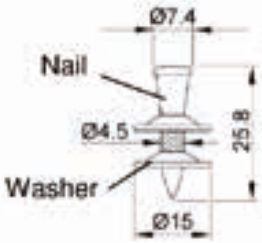

Nailed shear connector X-HVB	Annex A2
Dimensions and materials	

Z34612.16 8.06.02-26/14

Electronic copy of the ETA by DIBt: ETA-15/0876

Specification of intended use

The nailed shear connector X-HVB is intended to be used as connection device between steel and concrete in composite beams and composite decks according to EN 1994-1-1. The nailed shear connector can either be used in new buildings or for the renovation of existing buildings with the aim to increase the bearing capacity of aged floor constructions.

Shear connections of composite structures subject to:

- Static and quasi-static loading.
- As the X-HVB is a ductile shear connector according to EN 1994-1-1, section 6.6, seismic loading is covered if the X-HVB is used as shear connector in composite beams used as secondary seismic members in dissipative as well as non-dissipative structures according to EN 1998-1.

Base materials:

- Structural steel S235, S275 and S355 in qualities JR, JO, J2, K2 according to EN 10025-2, thickness see Annex B3.
- Old steels which cannot be classified accordingly are still applicable provided these are made of unalloyed carbon steel with minimum yield strength f_y of 170 N/mm².

Concrete:

- Normal weight concrete C20/25 – C50/60 according to EN 206, minimum slab thickness see Annex B4.
- Light weight concrete LC 20/22 – LC 50/55 according to EN 206 with a raw density $\rho \geq 1750$ kg/m³, minimum slab thickness see Annex B4.

Composite decking:

- Steel for profiled sheeting follows EN 1993-1-3 and the material codes given there.

Design:

- Design of the composite beams with X-HVB shear connectors is made according to EN 1994-1-1.
- The X-HVB shear connectors are ductile shear connectors according to EN 1994-1-1, section 6.6.
- The partial safety factor of $\gamma_v = 1.25$ is used provided no other values are given in national regulations of the member states.

Installation:

- The installation is only carried out according to the manufacturer's instructions.
- In combination with composite decking the steel sheeting is in direct contact with the steel base material in the area of the connection.
- Cartridge selection and tool energy settings in order to match the application limit diagram are taken into account, see Annex B3.
- Installation tests are carried out (e.g. check of nail head standoff h_{NVS}), provided the fitness of the recommended cartridge cannot be checked otherwise.

Nailed shear connector X-HVB	Annex B1
Specification of intended use	

Z34612.16 8.06.02-26/14

Electronic copy of the ETA by DIBt: ETA-15/0876

Powder-actuated fastening tools and cartridge 6.8/18M

Powder-actuated fastening tool
DX 76 HVB

Powder-actuated fastening tool
DX 76 PTR HVB

Fastener guide
X-76-F-HVB

Fastener guide
X-76-F-HVB-PTR

Piston
X-76-P-HVB
Buffer: X-76-PS

Piston
X-76-P-HVB-PTR
Buffer: X-76-PS

Detail of wheel on tool allowing continuous regulation of the driving energy within one cartridge colour:
Setting 1: Minimum energy
Setting 4: Maximum energy

Cartridges 6.8/18 M

Red: Medium high load (level 6)
Black: Extra high load (level 7)

Blue: Medium load (level 5), see Annex B3

Nailed shear connector X-HVB	Annex B2
Powder-actuated fastening tool and components	

Z34612.16 8.06.02-26/14

Electronic copy of the ETA by DIBt: ETA-15/0876

Application limit and tool energy setting

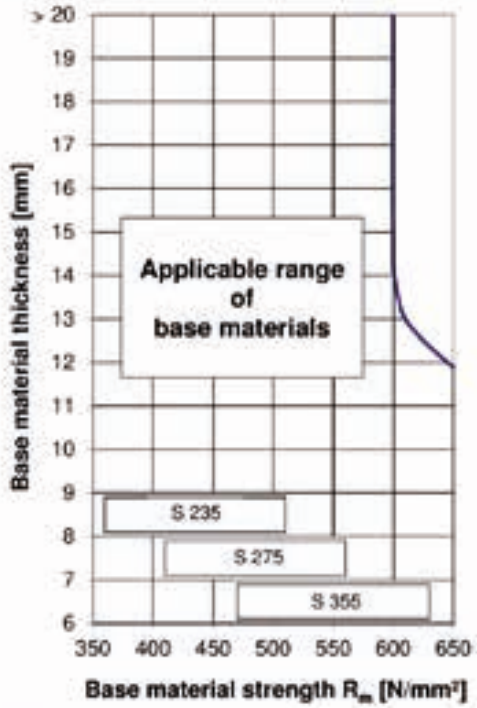

Notes
Minimum section covered: IPE 100 (see annex C3)
Minimum base material thickness for beams with composite decking: 8 mm

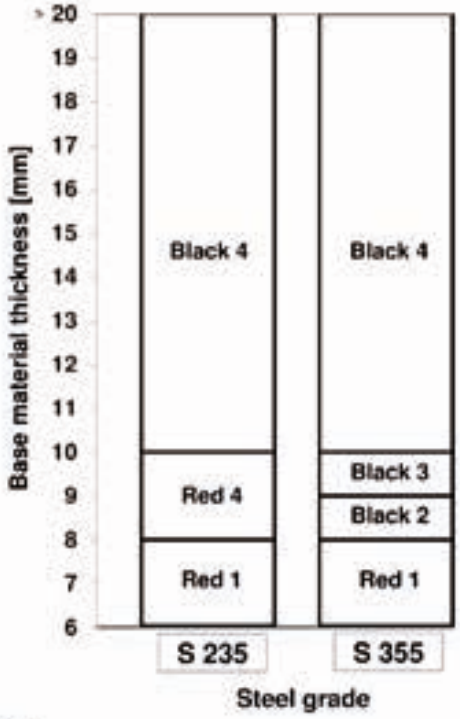

Notes:
In case of thin base materials, the blue cartridge is possible to be used. Blue 3 corresponds to Red 1.
Fine adjustment on the energy based on job site trials.

Fastener inspection

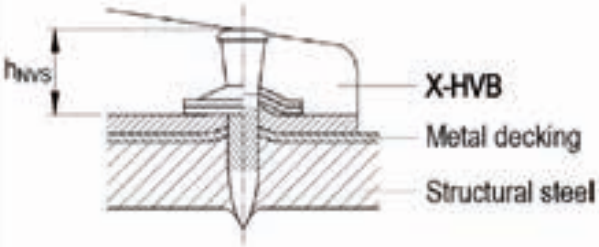

Clearly visible piston mark on top washer

8.2 mm ≤ h_{NVS} ≤ 9.8 mm

Nailed shear connector X-HVB	Annex B3
Application limit, cartridge selection and fastener inspection	

Z34612.16 8.06.02-26/14

Electronic copy of the ETA by DIBt: ETA-15/0876

Composite decking geometry

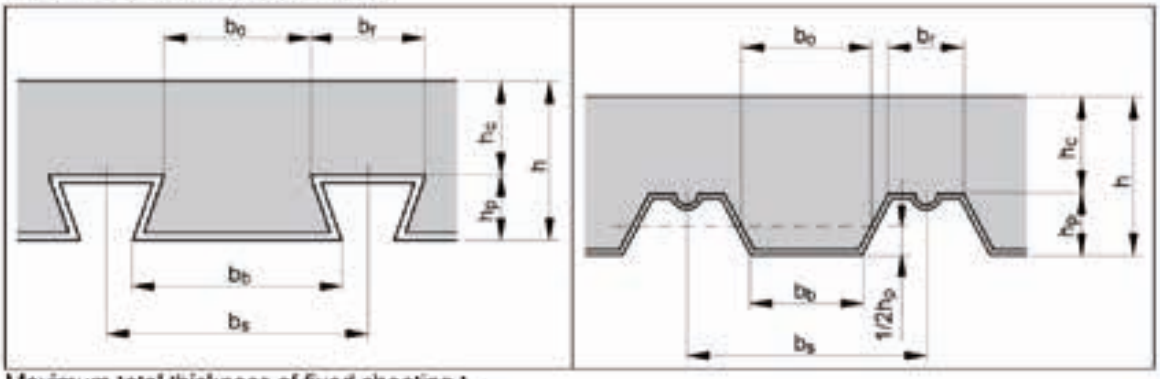

Maximum total thickness of fixed sheeting t_{fix}
2.0 mm for X-HVB 80, X-HVB 95 and X-HVB 110
1.5 mm for X-HVB 125 and X-HVB 140

Minimum slab thickness

X-HVB	Minimum slab thickness h [mm]	
	Without effect of corrosion	With effect of corrosion
40	50	60
50	60	70
80	80	100
95	95	115
110	110	130
125	125	145
140	140	160

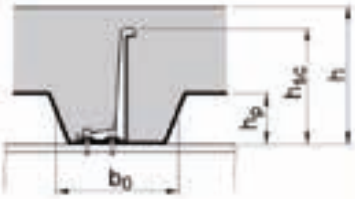

Maximum decking height h_p dependent on decking geometry

X-HVB	Maximum height of composite decking h_p [mm]		
	$\frac{b_0}{h_p} \geq 1.8$	$1.0 < \frac{b_0}{h_p} < 1.8$	$\frac{b_0}{h_p} \leq 1.0$ [a)]
80	45	45	30
95	60	57	45
110	75	66	60
125	80	75	73
140	80	80	80

a) $b_0/h_p \geq 1$ for composite decking perpendicular to beam combined with X-HVB orientation parallel with beam

Nailed shear connector X-HVB	Annex B4
Geometric parameters	

Z34612.16 8.06.02-26/14

Electronic copy of the ETA by DIBt: ETA-15/0876

Positioning of X-HVB connectors in solid concrete slabs, X-HVB are to be positioned parallel with beam

One row of connectors

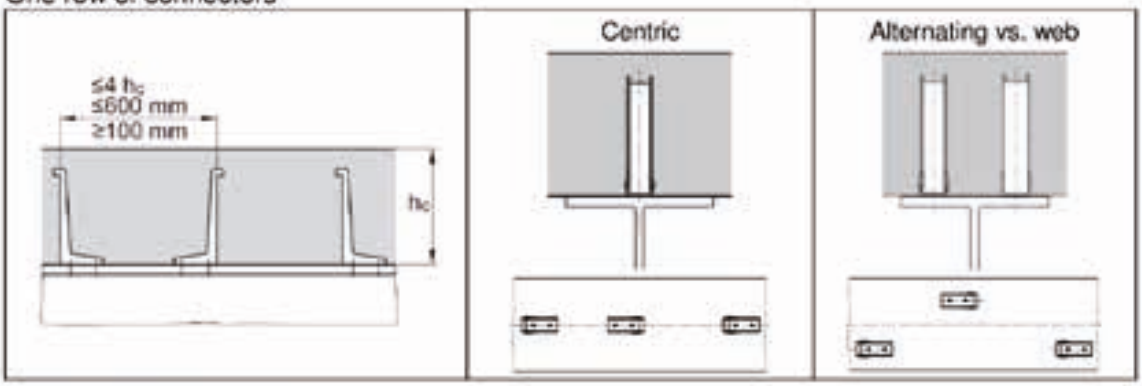

Two rows of connectors

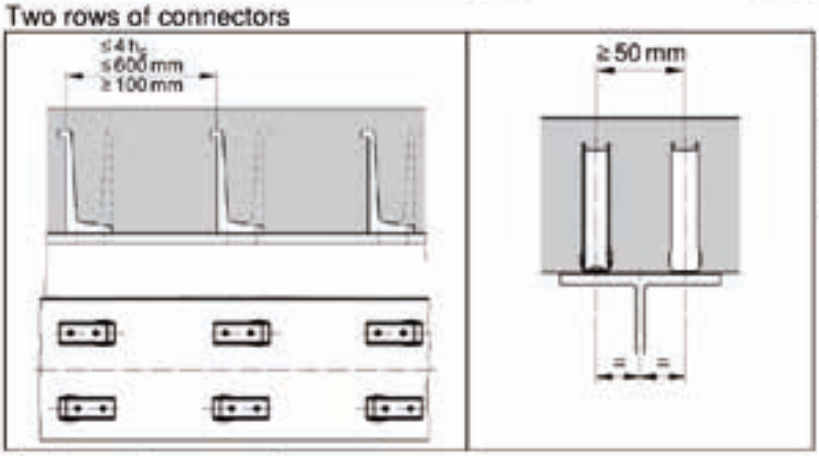

Remark:
When using thin solid concrete slabs in combination with small I-profiles the „duckwalk" positioning according to Annex C3 applies.

Maximum three rows of connectors

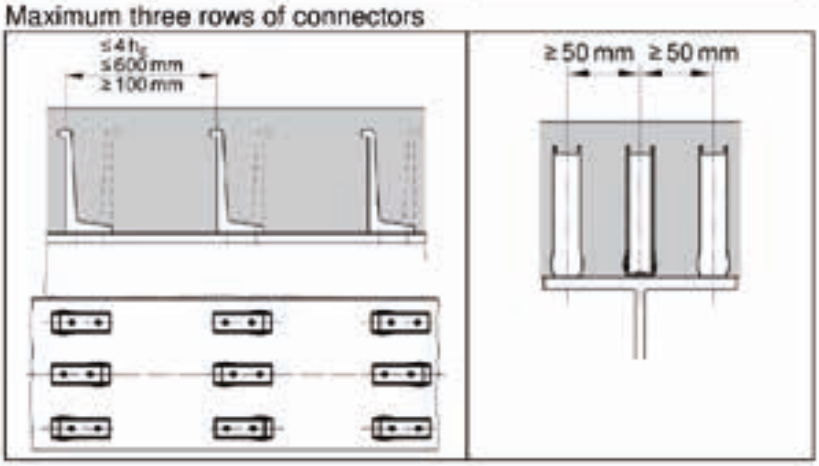

Nailed shear connector X-HVB	Annex B5
Positioning in composite beams with solid concrete slabs	

Z34612.16 8.06.02-26/14

Electronic copy of the ETA by DIBt: ETA-15/0876

Spacing and positioning within cross section

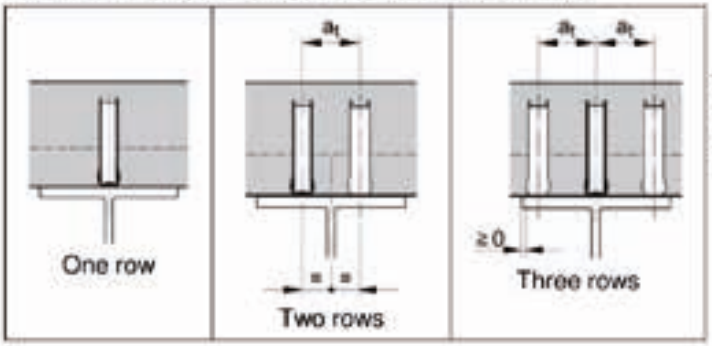

$a_t \geq 50$ mm for compact profiled decking with $b_0/h_p \geq 1.8$

$a_t \geq 100$ mm for other decking

Minimum rib width and spacing to decking in case of single row positioning

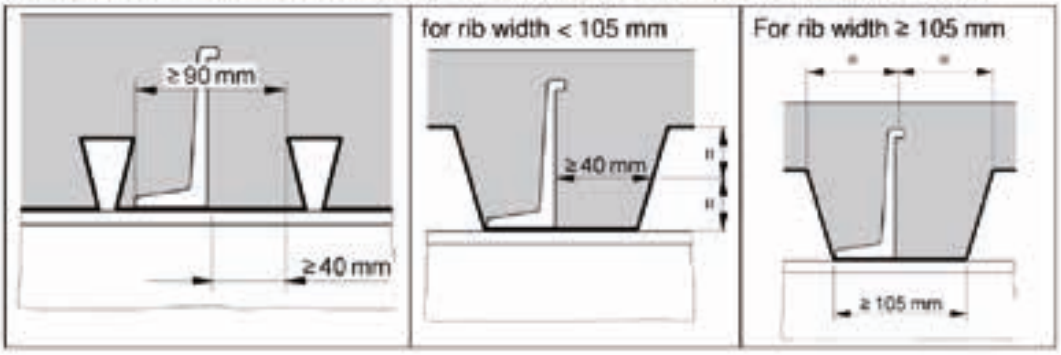

Minimum rib width in case of multiple row positioning

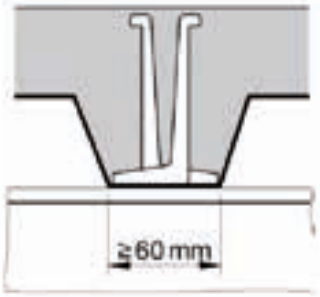

Nailed shear connector X-HVB	Annex B6
Positioning in composite beams with composite decking transverse and X-HVB positioning parallel with beam axis	

Z34612.16 8.06.02-26/14

Electronic copy of the ETA by DIBt: ETA-15/0876

Spacing and positioning within cross section

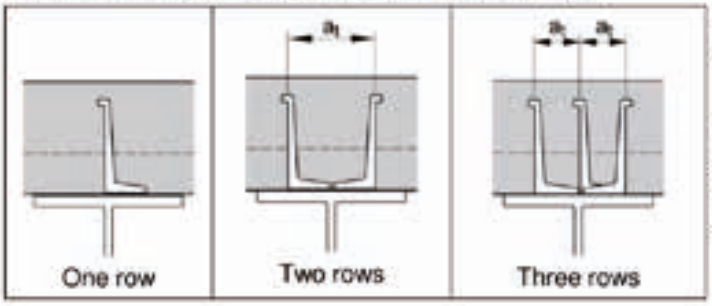

Two rows:

$a_l \geq 100$ mm for all types decking

Three rows:

$a_l \geq 50$ mm for compact profiled decking with $b_0/h_p \geq 1.8$

$a_l \geq 100$ mm for other decking

Positioning in one row with composite deck with or without rib stiffener

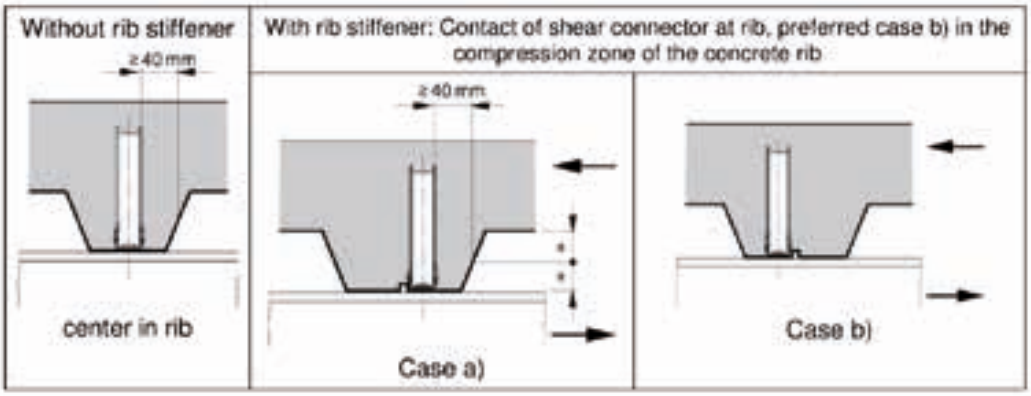

Positioning in two or three rows

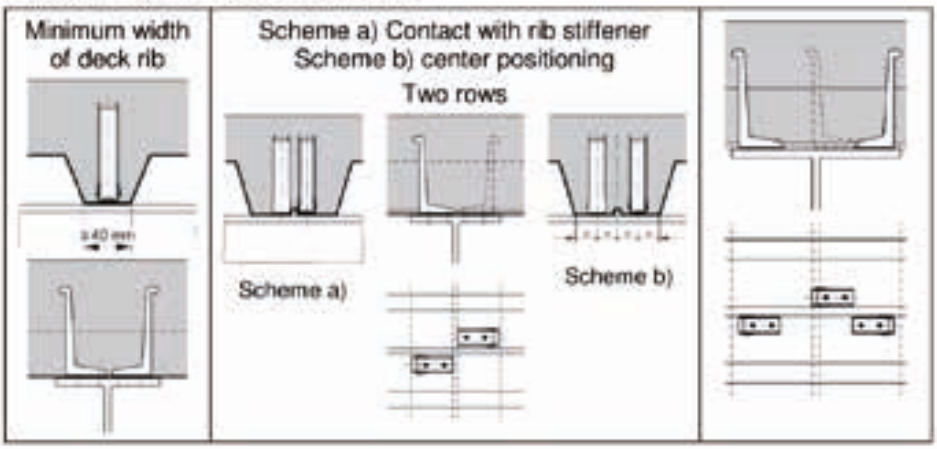

Nailed shear connector X-HVB	Annex B7
Positioning in composite beams with composite decking transverse and X-HVB positioning transverse with beam axis	

Z34612.16 8.06.02-26/14

Electronic copy of the ETA by DIBt: ETA-15/0876

Spacing and positioning within cross section, X-HVB are to be positioned parallel with beam

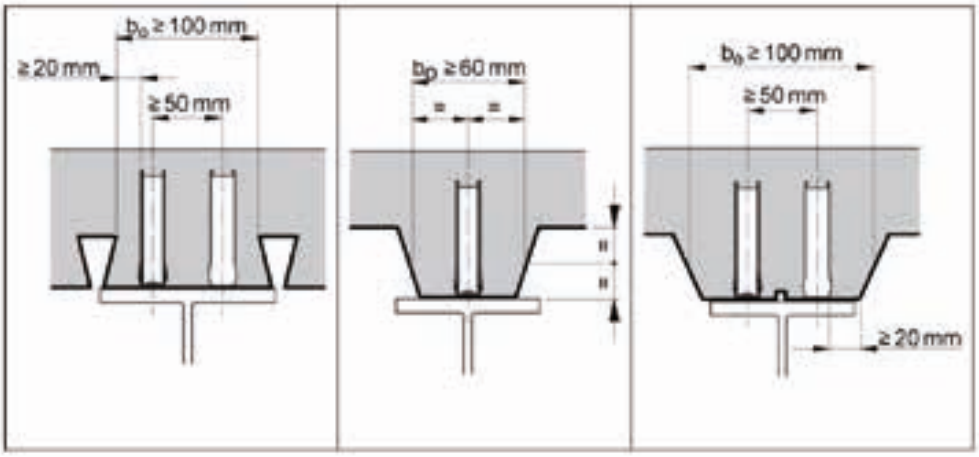

If a centric positioning within the concrete rib is not possible due to the shape of the composite decking, the decking needs to be split:

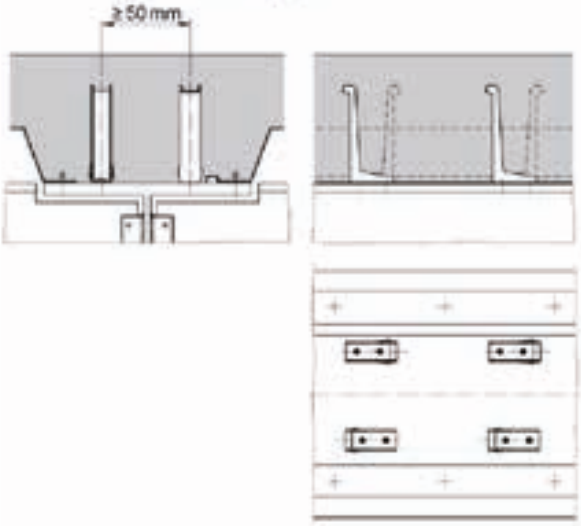

Nailed shear connector X-HVB	Annex B8
Positioning in composite beams with composite decking parallel with beam axis	

Z34612.16 8.06.02-26/14

Electronic copy of the ETA by DIBt: ETA-15/0876

Table 3: Characteristic and design resistance in composite beams with solid slabs[1)]

Shear Connector	Characteristic Resistance P_{Rk} [kN]	Design Resistance P_{Rd} [kN]	Minimum base material thickness [mm]	X-HVB positioning[3)]	Ductility assessment
X-HVB 40	29	23	6	"duckwalk"	Ductile according to EN 1994-1-1
X-HVB 50	29	23	6		
X-HVB 80	32.5	26	8 [2)]	parallel with beam	
X-HVB 95	35	28			
X-HVB 110	35	28			
X-HVB 125	37.5	30			
X-HVB 140	37.5	30			

1) In the absence of other national regulations a partial safety factor $\gamma_V = 1.25$ applies
2) Reduction to 6 mm minimum base material thickness possible, see Annex C3
3) "Duckwalk" positioning according to Annex C3, positioning "parallel with beam" according to Annex B5

Conditions:
- Normal weight concrete C20/25 to C50/60
- Light weight concrete LC20/22 to LC50/55 with a minimum density $\rho = 1750$ kg/m³
- Observation of positioning rules according to Annex B5 and Annex C3

Table 4: Design resistance in composite beams with decking ribs transverse to beam axis

X-HVB positioning	Design Resistance $P_{Rd,t}$	Ductility assessment
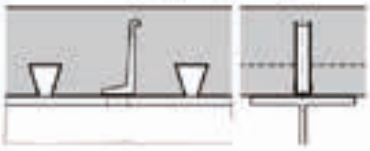 X-HVB positioning longitudinal with the beam	$P_{Rd,t,l} = k_{t,l} \cdot P_{Rd}$ $k_{t,l} = \frac{0.66}{\sqrt{n_r}} \cdot \frac{b_0}{h_p} \cdot \left(\frac{h_{SC}}{h_p} - 1\right) \leq 1.0$	Ductile according to EN 1994-1-1
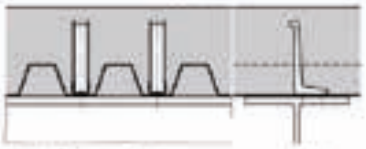 X-HVB positioning transverse with the beam	$P_{Rd,t,t} = 0.89 \cdot k_{t,t} \cdot P_{Rd}$ $k_{t,t} = \frac{1.18}{\sqrt{n_r}} \cdot \frac{b_0}{h_p} \cdot \left(\frac{h_{SC}}{h_p} - 1\right) \leq 1.0$	

Conditions:
- Design resistance P_{Rd} for solid concrete slabs according to Table 3
- Normal weight concrete C20/25 to C50/60
- Light weight concrete LC20/22 to LC50/55 with a minimum raw density $\rho = 1750$ kg/m³
- Geometric parameters b_0, h_p and h_{SC} according to Annex B4, n_r corresponds to the number of X-HVBs per rib
- Observation of positioning rules according to Annex B6 and Annex B7
- Applicable for X-HVB 80, X-HVB 95, X-HVB 110, X-HVB 125, X-HVB 140

Nailed shear connector X-HVB	Annex C1
Characteristic and design values of resistance: Solid concrete slabs and composite slabs with decking transverse to beam	

Electronic copy of the ETA by DIBt: ETA-15/0876

Table 5: Design resistance in composite beams with decking ribs parallel to beam axis

X-HVB positioning	Design Resistance $P_{Rd,i}$	Ductility assessment
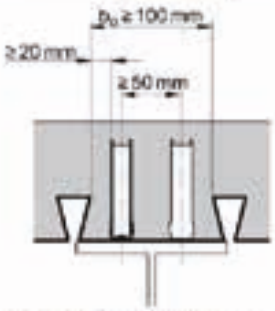 X-HVB positioning longitudinal with the beam	$P_{Rd,i} = k_i \cdot P_{Rd}$ $k_i = 0.6 \cdot \frac{b_0}{h_p} \cdot \left(\frac{h_{SC}}{h_p} - 1\right) \leq 1.0$	Ductile according to EN 1994-1-1

Conditions:

- Design resistance P_{Rd} for solid concrete slabs according to Annex C1, Table 3
- X-HVB are to be positioned parallel with beam
- Normal weight concrete C20/25 to C50/60
- Light weight concrete LC20/22 to LC50/55 with a minimum density ρ = 1750 kg/m³
- Geometric parameters b_0, h_p and h_{SC} according to Annex B4
- Observation of positioning rules according to Annex B8
- Applicable for X-HVB 80, X-HVB 95, X-HVB 110, X-HVB 125, X-HVB 140

Nailed shear connector X-HVB	Annex C2
Characteristic and design values of resistance: Composite slabs with decking parallel to beam	

Electronic copy of the ETA by DIBt: ETA-15/0876

Table 3: Characteristic and design resistance in composite beams with solid slabs[1)]

Shear Connector	Characteristic Resistance P_{Rk} [kN]	Design Resistance P_{Rd} [kN]	Minimum base material thickness [mm]	X-HVB positioning[3)]	Ductility assessment
X-HVB 40	29	23	6	"duckwalk"	Ductile according to EN 1994-1-1
X-HVB 50	29	23	6		
X-HVB 80	32.5	26	8 [2)]	parallel with beam	
X-HVB 95	35	28			
X-HVB 110	35	28			
X-HVB 125	37.5	30			
X-HVB 140	37.5	30			

1) In the absence of other national regulations a partial safety factor $\gamma_V = 1.25$ applies
2) Reduction to 6 mm minimum base material thickness possible, see Annex C3
3) "Duckwalk" positioning according to Annex C3, positioning "parallel with beam" according to Annex B5

Conditions:
- Normal weight concrete C20/25 to C50/60
- Light weight concrete LC20/22 to LC50/55 with a minimum density $\rho = 1750$ kg/m³
- Observation of positioning rules according to Annex B5 and Annex C3

Table 4: Design resistance in composite beams with decking ribs transverse to beam axis

X-HVB positioning	Design Resistance $P_{Rd,t}$	Ductility assessment
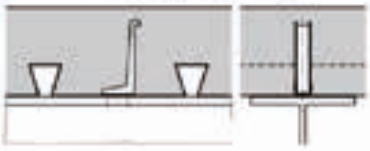 X-HVB positioning longitudinal with the beam	$P_{Rd,t,l} = k_{t,l} \cdot P_{Rd}$ $k_{t,l} = \frac{0.66}{\sqrt{n_r}} \cdot \frac{b_0}{h_p} \cdot \left(\frac{h_{SC}}{h_p} - 1\right) \leq 1.0$	Ductile according to EN 1994-1-1
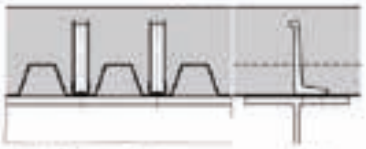 X-HVB positioning transverse with the beam	$P_{Rd,t,t} = 0.89 \cdot k_{t,t} \cdot P_{Rd}$ $k_{t,t} = \frac{1.18}{\sqrt{n_r}} \cdot \frac{b_0}{h_p} \cdot \left(\frac{h_{SC}}{h_p} - 1\right) \leq 1.0$	

Conditions:
- Design resistance P_{Rd} for solid concrete slabs according to Table 3
- Normal weight concrete C20/25 to C50/60
- Light weight concrete LC20/22 to LC50/55 with a minimum raw density $\rho = 1750$ kg/m³
- Geometric parameters b_0, h_p and h_{SC} according to Annex B4, n_r corresponds to the number of X-HVBs per rib
- Observation of positioning rules according to Annex B6 and Annex B7
- Applicable for X-HVB 80, X-HVB 95, X-HVB 110, X-HVB 125, X-HVB 140

Nailed shear connector X-HVB	Annex C1
Characteristic and design values of resistance: Solid concrete slabs and composite slabs with decking transverse to beam	

Electronic copy of the ETA by DIBt: ETA-15/0876

Page 17 of European Technical Assessment
ETA-15/0876 of 3 June 2016

English translation prepared by DIBt

Table 5: Design resistance in composite beams with decking ribs parallel to beam axis

X-HVB positioning	Design Resistance $P_{Rd,i}$	Ductility assessment
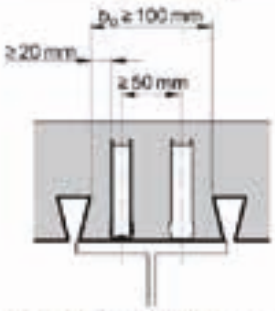 X-HVB positioning longitudinal with the beam	$P_{Rd,i} = k_i \cdot P_{Rd}$ $k_i = 0.6 \cdot \frac{b_0}{h_p} \cdot \left(\frac{h_{sc}}{h_p} - 1\right) \leq 1.0$	Ductile according to EN 1994-1-1

Conditions:

- Design resistance P_{Rd} for solid concrete slabs according to Annex C1, Table 3
- X-HVB are to be positioned parallel with beam
- Normal weight concrete C20/25 to C50/60
- Light weight concrete LC20/22 to LC50/55 with a minimum density ρ = 1750 kg/m³
- Geometric parameters b_0, h_p and h_{sc} according to Annex B4
- Observation of positioning rules according to Annex B8
- Applicable for X-HVB 80, X-HVB 95, X-HVB 110, X-HVB 125, X-HVB 140

Nailed shear connector X-HVB	Annex C2
Characteristic and design values of resistance: Composite slabs with decking parallel to beam	

Z34612.16 8.06.02-26/14

Electronic copy of the ETA by DIBt: ETA-15/0876

Table 6: Temperature dependent strength reduction factor

Temperature of top flange $\theta_{X\text{-}HVB}$ [°C]	$k_{u,\theta,X\text{-}HVB}$
20	1.00
100	1.00
200	0.95
300	0.77
400	0.42
500	0.24
600	0.12
≥ 700	0

The design of the X-HVB shear connector in case of a fire is done according to EN 1994-1-2. The reduction factor $k_{u,\theta,X\text{-}HVB}$ shall be determined with the temperature of the steel top flange to which the X-HVB is connected.

The characteristic resistance of the X-HVB nailed shear connector at elevated temperature is calculated:

In case of solid concrete slabs:

$$P_{fi,Rk} = k_{u,\theta,X\text{-}HVB} \cdot P_{Rk}$$

with

$P_{fi,Rk}$ .... characteristic resistance of X-HVB shear connector at elevated temperature.
P_{Rk} .... characteristic resistance of X-HVB shear connector according to Annex C1, Table 3.

In case of composite beams with decking ribs transverse to the beam:

$$P_{fi,Rk} = k_{u,\theta,X\text{-}HVB} \cdot k_{t,l} \cdot P_{Rk} \quad \text{or} \quad P_{fi,Rk} = 0.09 \cdot k_{u,\theta,X\text{-}HVB} \cdot k_{t,t} \cdot P_{Rk}$$

with

$P_{fi,Rk}$ .... characteristic resistance of X-HVB shear connector at elevated temperature.
P_{Rk} .... characteristic resistance of X-HVB shear connector according to Annex C1, Table 3
$k_{t,l}$ or $k_{t,t}$ .. reduction factor according to Annex C1, Table 4

In case of composite beams with decking ribs parallel to the beam:

$$P_{fi,Rk} = k_{u,\theta,X\text{-}HVB} \cdot k_{t} \cdot P_{Rk}$$

with

$P_{fi,Rk}$ .... characteristic resistance of X-HVB shear connector at elevated temperature.
P_{Rk} .... characteristic resistance of X-HVB shear connector according to Annex C1, Table 3
k_t ... reduction factor according to Annex C2, Table 5

$k_{u,\theta,X\text{-}HVB}$ temperature dependent reduction factor according to Table 6.

The design resistance of the X-HVB nailed shear connector at elevated temperature is calculated as follows:

$$P_{fi,Rd} = \frac{1}{\gamma_{M,fi}} \cdot P_{fi,Rk}$$

with

$\gamma_{M,fi}$ .... partial safety factor in case of a fire, in the absence of national regulations $\gamma_{M,fi} = 1.0$ applies

Nailed shear connector X-HVB	Annex C5
Characteristic and design resistance to fire	

Electronic copy of the ETA by DIBt: ETA-15/0876

ANNEX B: DESIGN EXAMPLES

6.1 Substituting welded studs with X-HVB

Section 6.6.3.1 of EN1994-1-1 states that the design resistance of a headed stud, automatically welded to a steel beam, should be the lesser value of:

$$P_{Rd} = \frac{0{,}8 f_u \pi d^2/4}{\gamma_V}$$

$$P_{Rd} = \frac{0{,}29 \alpha d^2 \sqrt{f_{ck} E_{cm}}}{\gamma_V}$$

Where:

- $\alpha = 0{,}2(h_{sc}/d+1)$, for $3 \leq h_{sc}/d \leq 4$
- $\alpha = 1$, for $h_{sc}/d > 4$
- γ_V is the partial safety factor (recommended value = 1.25)
- d is the diameter of the stud shank
- f_u is the specified ultimate tensile strength of the stud material (≤ 500 N/mm^2)
- h_{sc} is the overall nominal height of the stud.

When profiled sheeting is used, the shear resistance of the welded stud is calculated by multiplying the design shear resistance (PRd) by reduction factors that are dependent on profiled sheeting orientation and profiles.

For profiled sheeting with ribs parallel to the supporting beam, the reduction factor k_l is:

$$k_l = 0{,}6 \cdot \frac{b_0}{h_p} \cdot \left(\frac{h_{sc}}{h_p} - 1\right) \leq 1{,}0$$

For profiled sheeting with ribs transverse to the supporting beam, the reduction factor is governed by **Table 8** (Table 6.2 of EN1994-1-1) and the following expression:

$$k_t = \frac{0.7}{\sqrt{n_r}} \cdot \frac{b_0}{h_p} \cdot \left(\frac{h_{sc}}{h_p} - 1\right)$$

Where n_r is the number of studs in one rib, not to exceed two.

Number of studs per rib	Thickness of profiled sheeting [mm]	Studs not exceeding 20 mm in diam. and welded through profiled sheeting	Profiled sheeting with holes and studs 19 mm or 22 mm in diameter
$n_r = 1$	≤ 1	0.85	0.75
	≥ 1	1.00	0.75
$n_r = 2$	≤ 1	0.70	0.60
	≥ 1	0.80	0.60

Table 8: Upper limits for reduction factors k_t

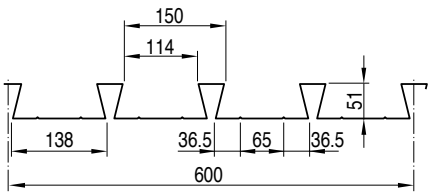

Figure 42: Holorib 51 profiled sheeting geometry

For this example, the design hypothesis is as follows

- Slab thickness: 120 mm
- Concrete: class C25/30, f_{ck} = 25 N/mm²
- Stud: diameter = 19 mm, height = 100 mm, fu = 450 N/mm²
- Profiled sheeting: Holorib 51, transverse to supporting beam, with holes for studs

The design resistance of a welded stud, is the minimum value of:

$$P_{Rd} = \frac{0{,}8 \cdot f_u \cdot \pi \cdot d^2/4}{\gamma_V} = \left(0.8 \cdot 450 \cdot \pi \cdot \frac{19^2}{4}\right) \cdot \frac{1}{1.25} = 81.7 \text{ kN}$$

$$P_{Rd} = \frac{0{,}29\alpha d^2\sqrt{f_{ck}E_{cm}}}{\gamma_V} = (0.29 \cdot 1 \cdot 19^2 \cdot \sqrt{25 \cdot 31000}) \cdot \frac{1}{1.25} = 73.7 \text{ kN}$$

Since $h_{sc}/d = \frac{100}{4} = 25 > 4$, α=1 .

Therefore $P_{Rd} = 73.7$ kN.

The reduction factor kt is given by:

$$k_t = \frac{0.7}{\sqrt{n_r}} \cdot \frac{b_0}{h_p} \cdot \left(\frac{h_{sc}}{h_p} - 1\right) = \frac{0.7}{1} \cdot \frac{114}{51} \cdot \left(\frac{100}{51} - 1\right) = 1.50$$

According to **Table 8**, the maximum value is 0.75, hence

$P_{Rd} = 73.7 \cdot 0.75 = 55.3$ kN.

The design shear resistance of X-HVB, assuming the X-HVB 110 is used, is 28 kN (**Table 6**). Considering that X-HVBs are positioned longitudinally to the beam axis, the reduction factor, kt,l is given by:

- Assuming one shear connector per rib

$$k_{t,l} = \frac{0.66}{\sqrt{n_r}} \cdot \frac{b_0}{h_p} \cdot \left(\frac{h_{sc}}{h_p} - 1\right) = \frac{0.66}{1} \cdot \frac{114}{51} \cdot \left(\frac{110}{51} - 1\right) = 1.71, \text{ capped at 1}$$

- Assuming 2 or more shear connectors per rib

$$k_{t,l} = \frac{0.66}{\sqrt{n_r}} \cdot \frac{b_0}{h_p} \cdot \left(\frac{h_{sc}}{h_p} - 1\right) = \frac{0.66}{\sqrt{2}} \cdot \frac{114}{51} \cdot \left(\frac{110}{51} - 1\right) = 1.21, \text{ capped at 1}$$

Hence, in both cases, P_{Rd} = 28 kN.

Accordingly, in this case, two X-HVBs are required to replace one welded stud per rib (55.3 / 28 = 1.975).

ANNEX C: EXAMPLES OF COMMERCIAL PROFILED SHEETING

Holorib HR51/150 – Two X-HVBs per rib

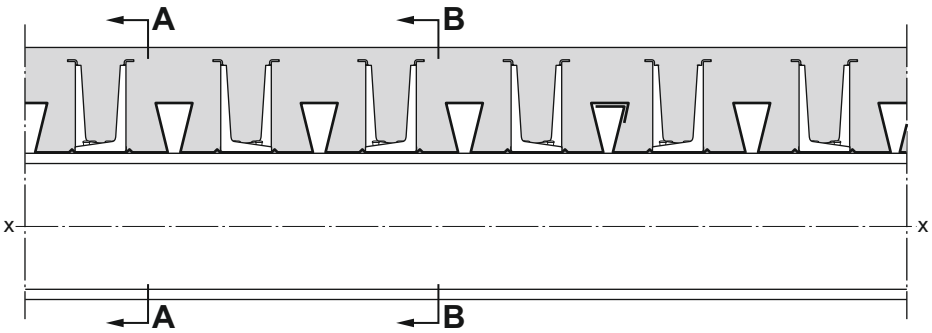

Section A-A

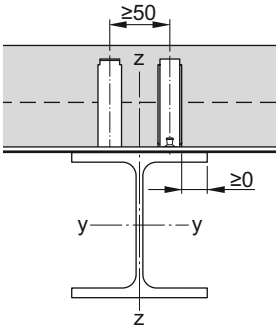

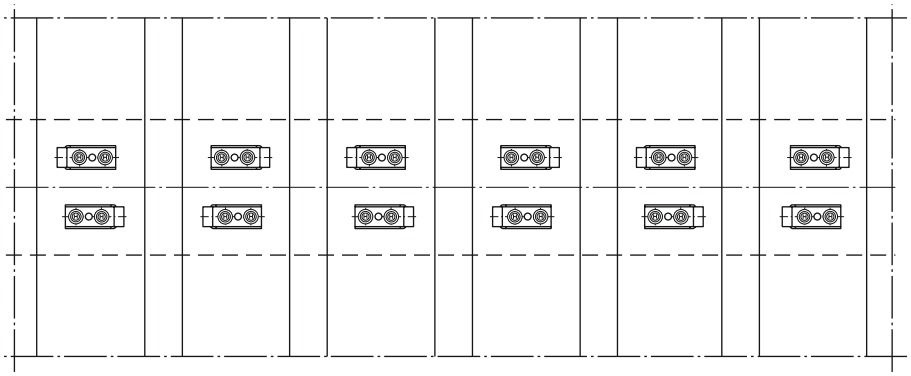

Section B-B

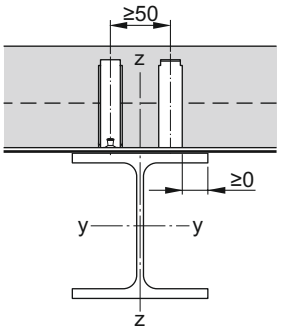

Holorib HR51/150 – Three X-HVBs per rib

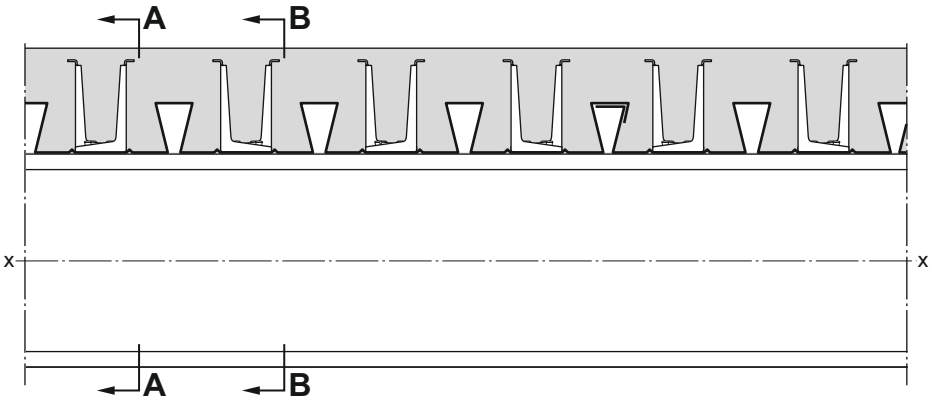

Section A-A

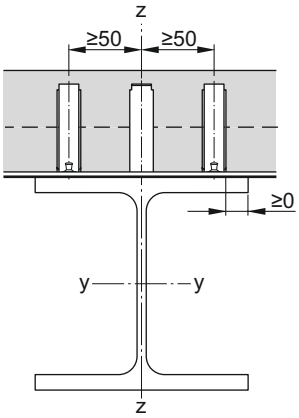

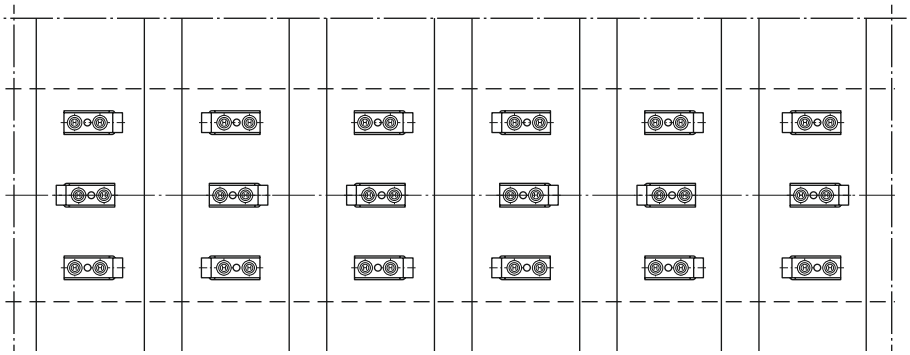

Section B-B

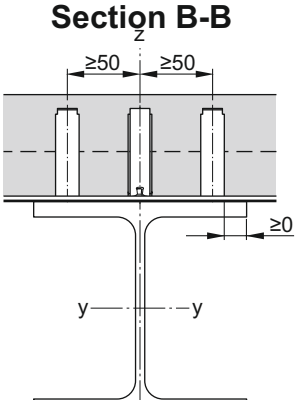

Cofrastra 40 – Two X-HVBs per rib

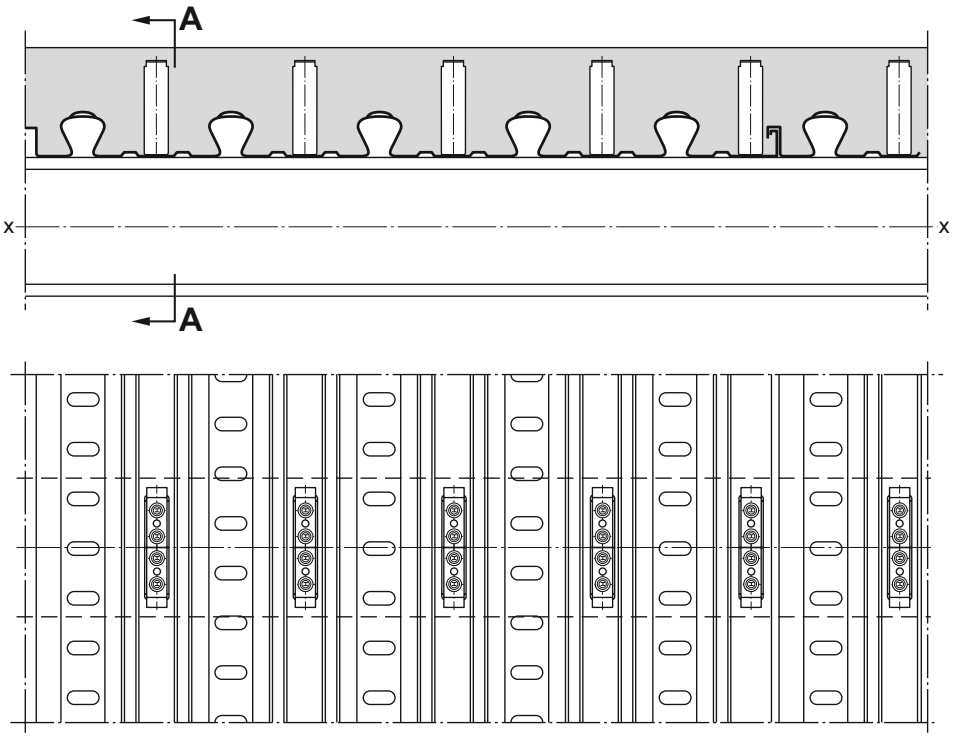

Section A-A

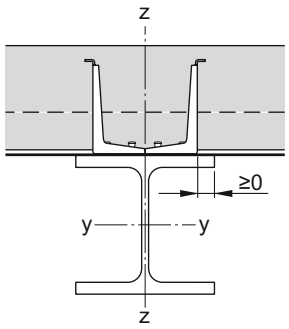

Cofrastra 40 – Three X-HVBs per rib

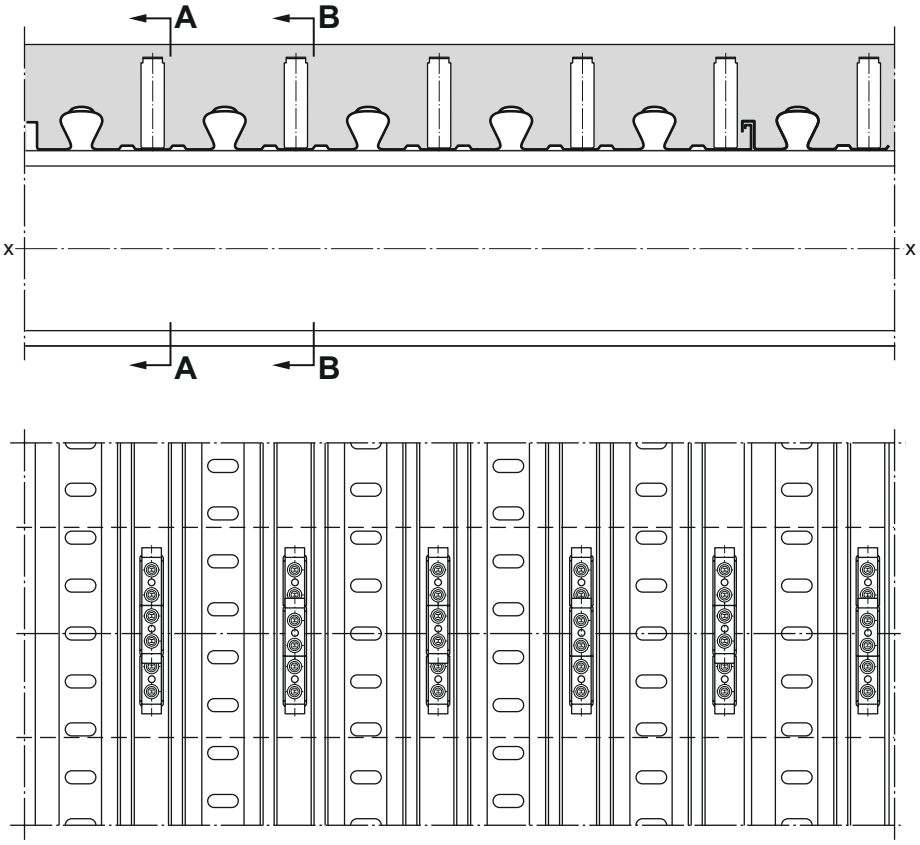

Section A-A

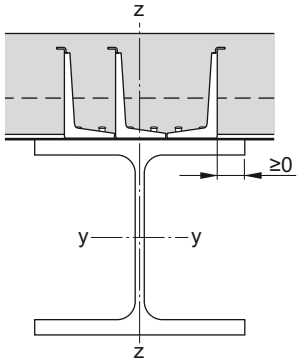

Section B-B

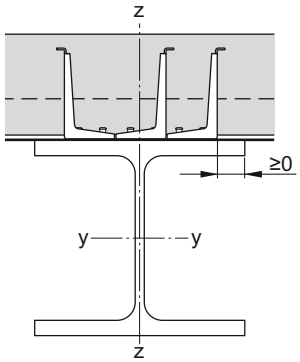

Cofrastra 70 – Two X-HVBs per rib

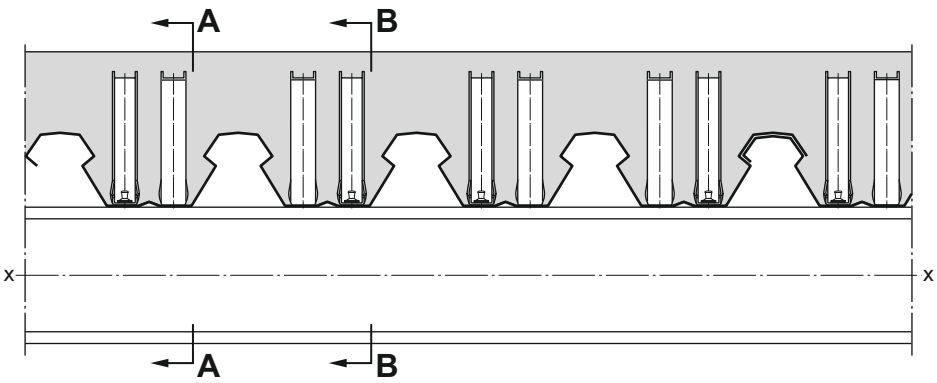

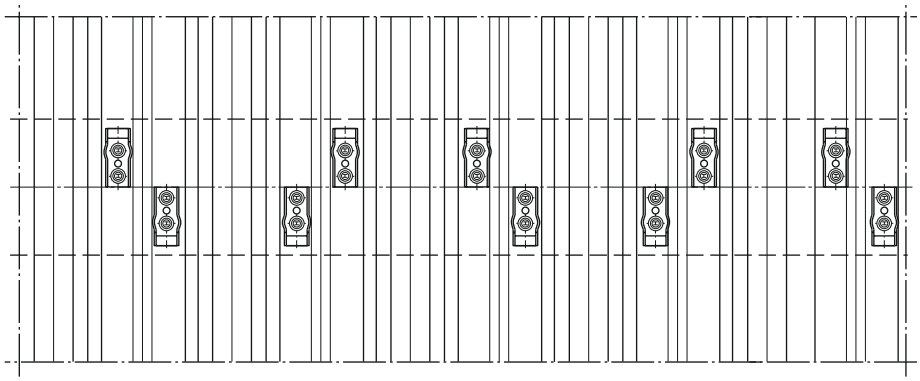

Section A-A

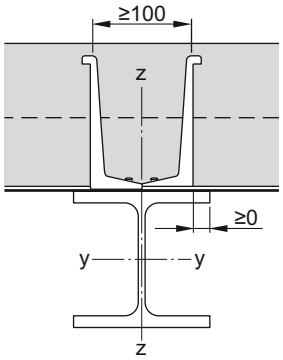

Section B-B

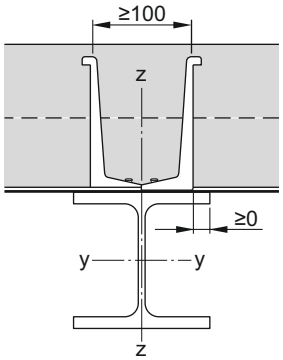

Cofrastra 70 – Three X-HVBs per rib

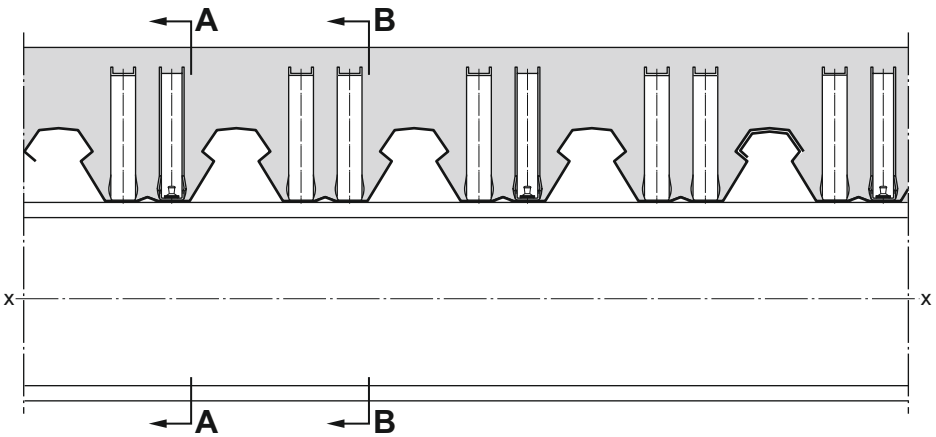

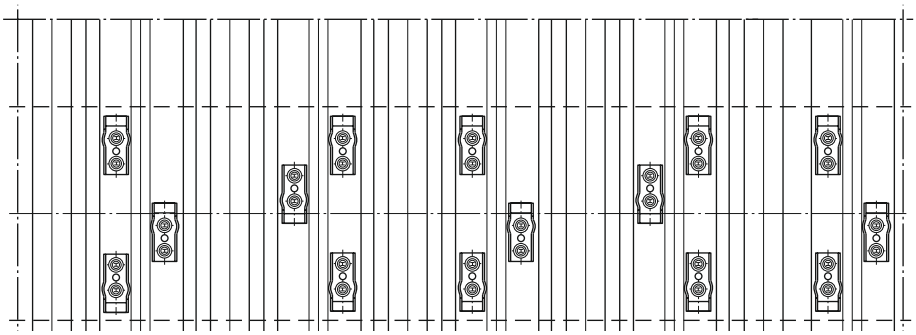

Section A-A

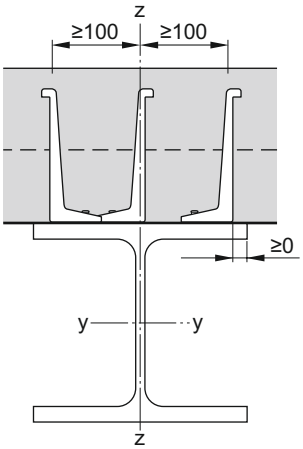

Section B-B

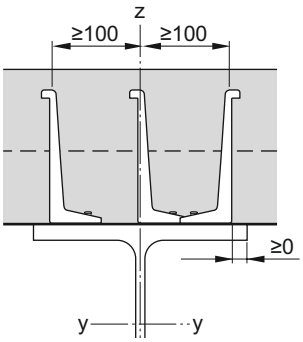

ANNEX D: DESIGNATION AND ITEM NUMBERS

Designation	Category	Item number
X-HVB 40	Shear connector	2112256
X-HVB 50	Shear connector	56467
X-HVB 80	Shear connector	239357
X-HVB 95	Shear connector	348179
X-HVB 110	Shear connector	348180
X-HVB 125	Shear connector	348181
X-HVB 140	Shear connector	348321
X-ENP 21 HVB	Nail	283512
6.8/18M 10 STD Blue	Cartridge	416485
6.8/18M 10 STD Red	Cartridge	416484
6.8/18M 10 STD Black	Cartridge	416486
DX 76 HVB	Tool	2090391
DX 76 MX	Tool	285789
DX 76 PTR	Tool	384004
X-76-P-HVB	Piston	285493
X-76-P-HVB-PTR	Piston	388847
X-76 PS	Piston stopper	285494
X-76-F-HVB	Fastener guide	285486
X-76-F-HVB-PTR	Fastener guide	388846

Hilti Aktiengesellschaft
9494 Schaan, Liechtenstein
P +423-234 2965

www.facebook.com/hiltigroup
www.hilti.group

Hilti = registered trademark of Hilti Corp., Schaan W4347 0217 0-en 1 Printed in Liechtenstein © 2017 Right of technical and programme changes reserved S. E. & O.