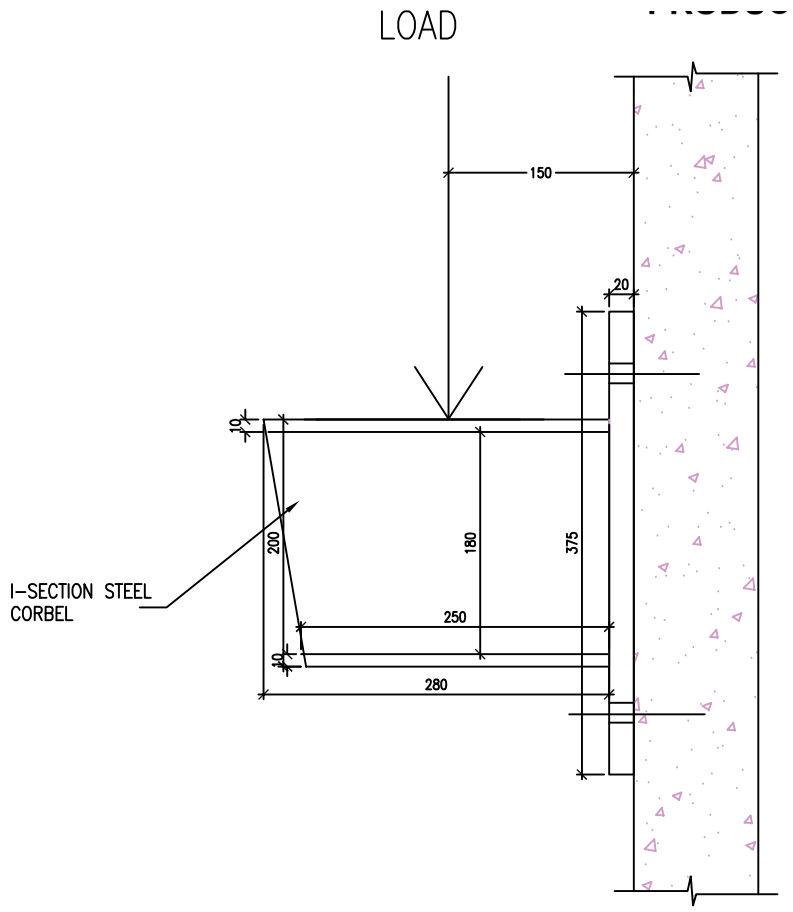

VIEW B

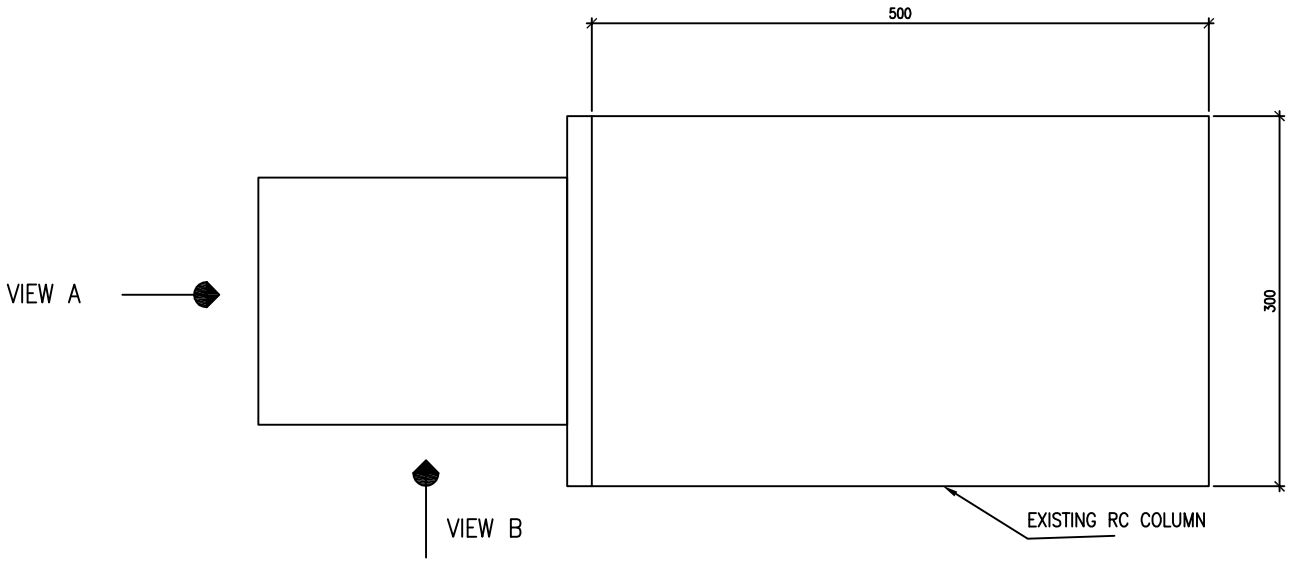

PLAN

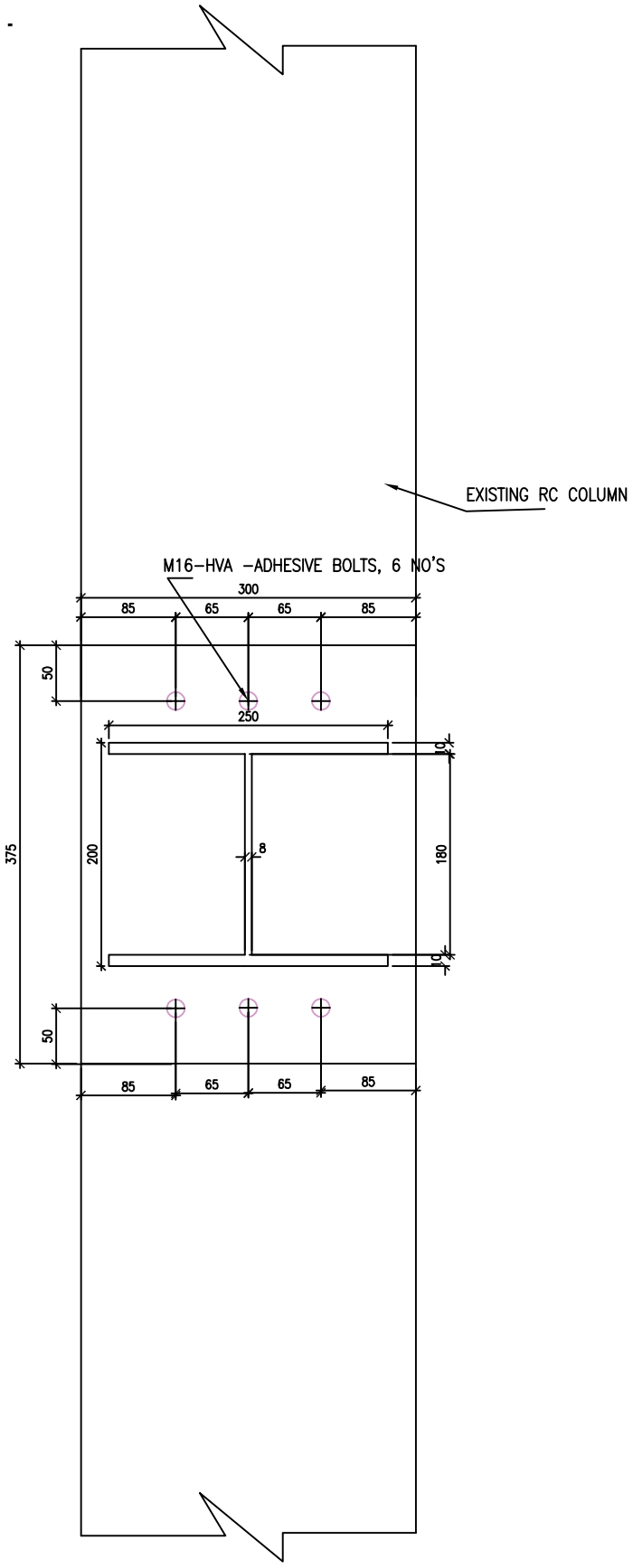

VIEW A

CORBEL DETAIL

PRODUCED BY AN AUTODESK EDUCATIONAL PRODUCT